GO GREEN
Think green, Be green
grokids™
Outdoor Play Equipments
PRODUCT CATALOG - 2023
Contact: 9666612277
TELANGANA CORPORATE SERVICES
• Playground • Play School • School • Parks • Playzone • Malls • Backyard • Recreational Zones • Society • Anganwadis

GO GREEN
Think green, Be green

GBS-30000	**Actual Dimensions**	**: 10.5 x 4.25 x 5.9 ft.**
Log House	**Recommended Area**	**: 13.5 x 7.25 ft.**
	Age Group	**: 3 - 6 Years**

Grokids Backyard Series (GBS)

Front View

Back View

Top View

Follow Us On :

GO GREEN
Think green, Be green

GBS-31000
Garden Shack

Actual Dimensions	: 10.5 x 3.25 x 5.9 ft.
Recommended Area	: 13.5 x 6.25 ft.
Age Group	: 3 - 6 Years

Front View

Back View

Grokids Backyard Series (GBS)

COLOUR OPTION

Top View

GBS-30104	**Actual Dimensions**	**: 11.5 x 9.8 x 5.9 ft.**
Timber Land	**Recommended Area**	**: 14.5 x 12.8 ft.**
	Age Group	**: 3 - 6 Years**

Front View

Back View

Top View

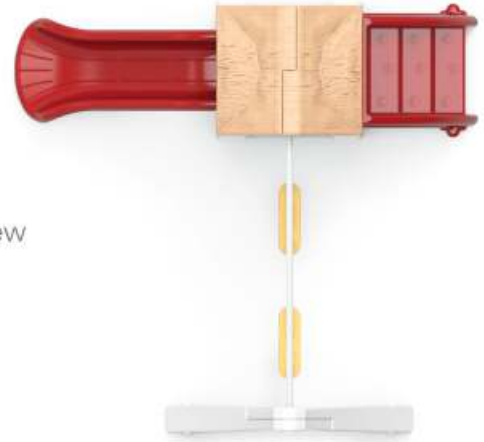

Follow Us On :

GBS-30101	**Actual Dimensions**	**: 14.75 x 9.8 x 5.9 ft.**
Tree House Jumbo	**Recommended Area**	**: 17.75 x 12.8 ft.**
	Age Group	**: 3 - 6 Years**

Front View

Back View

Top View

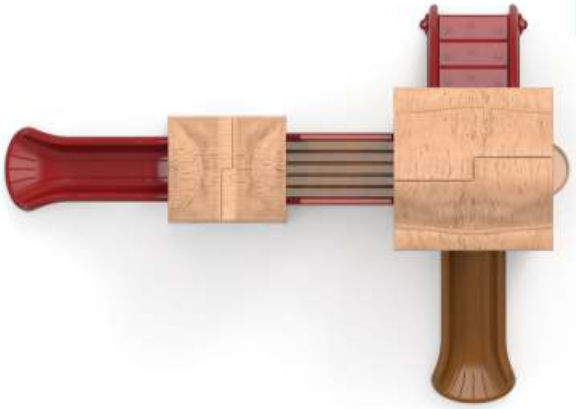

GBS-30124	Actual Dimensions	: 14.75 x 14.75 x 5.9 ft.
Deluxe House With Swing	Recommended Area	: 17.75 x 17.75 ft.
	Age Group	: 3 - 6 Years

Front View

Back View

Top View

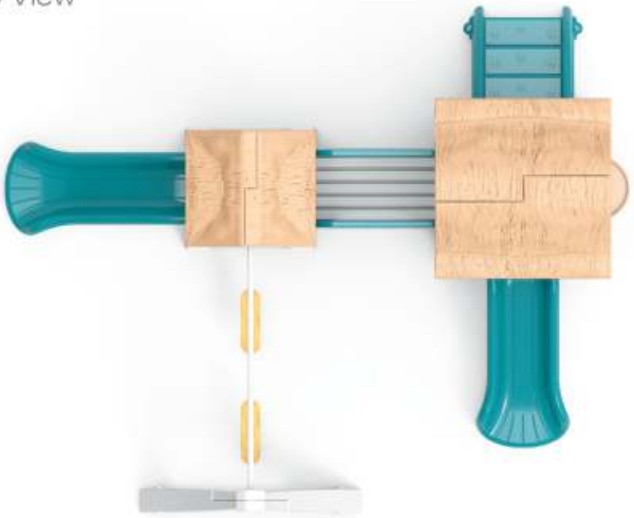

Follow Us On :

Front View

GBS-30134	**Actual Dimensions**	**: 24.6 x 16.4 x 5.9 ft.**
Adventure Land	**Recommended Area**	**: 27.6 x 19.4 ft.**
	Age Group	**: 3 - 6 Years**

Back View

Top View

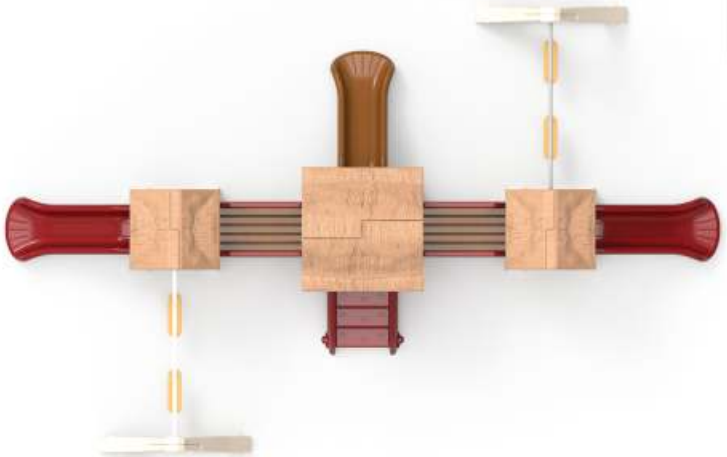

PACS-20101
Multi Activity Maxi Centre

Actual Dimensions	: 16 x 8 x 11 ft.
Recommended Area	: 19.5 x 11 ft.
Age Group	: 6 - 12 Years

NEW PRODUCT

Front View

Back View

Product Descriptions

1. U Shaped Roof	1 Pc.
2. Flower	1 Pc.
3. Leaf	1 Pc.
4. Part Slider with Entrance	3' Ht. 1Pc.
5. MS Step Hopper	1Pc.
6. See Saw 2 Seater	1 Pc.
7. MS Swing Single Seater	1 Pc.

* All plastic parts are Roto Moulded.
* The Sizes mentioned are approximate.

Top View

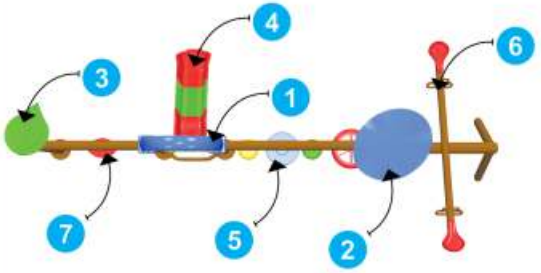

Follow Us On :

PACS-20102
Step N Swing Maxi Centre

Actual Dimensions	: 17 x 9 x 11 ft.
Recommended Area	: 20 x 12 ft.
Age Group	: 6 - 12 Years

Front View

NEW PRODUCT

Back View

Product Descriptions

1. Animal Shaped Roof	1 Pc.
2. Double Slider with Entrance 3' Ht.	1 Pc.
3. Panel	2 Pcs.
4. MS Perforated Sq. Deck	1 Pc.
5. MS Box Ladder	1 Pc.
6. MS Swing Set 2 Seater	1 Pc.
7. MS Step Hopper	1 Pc.

* All plastic parts are Roto Moulded.
* The Sizes mentioned are approximate.

Top View

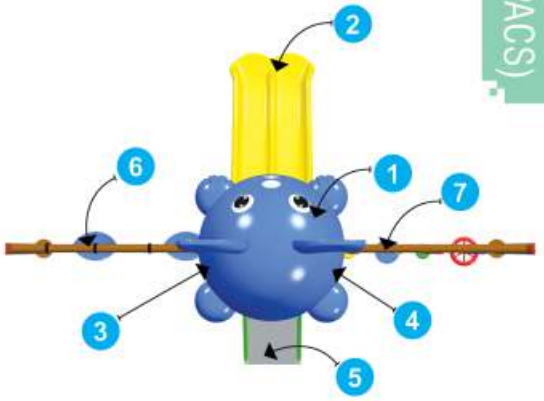

Front View

NEW PRODUCT

PACS-20103
Fun Swing N Slide

Actual Dimensions	: 15 x 11 x 12 ft.
Recommended Area	: 20 x 14 ft.
Age Group	: 6 - 12 Years

Back View

Product Descriptions

1. Animal Shaped Roof	1 Pc.
2. Double Slider with Entrance 3' Ht.	1 Pc.
3. Panel	1 Pcs.
4. MS Perforated Sq. Deck	1 Pc.
5. MS Box Ladder	1 Pc.
6. MS Swing Set 2 Seater	1 Pc.

* All plastic parts are Roto Moulded.
* The Sizes mentioned are approximate.

Top View

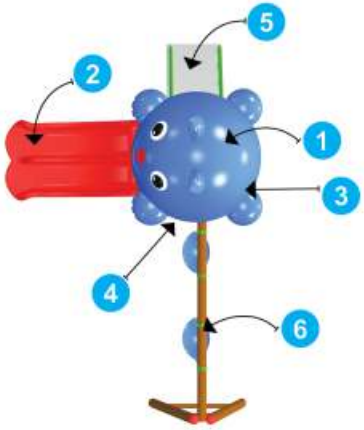

Follow Us On :

Front View

PACS-20104	**Actual Dimensions**	**: 17 x 9.7 x 13.2 ft.**
Jungle Playcentre Jr.	**Recommended Area**	**: 20 x 13 ft.**
	Age Group	**: 6 - 12 Years**

NEW PRODUCT

Back View

Product Descriptions

1. Animal Shaped Roof	1 Pc.
2. Tunnel Slider	3′ Ht. 1 Pc.
3. Double Slider with Entrance	3′ Ht. 1 Pc.
4. Entrance Stepper	1 Pc.
5. MS Perforated Sq. Deck	1 Pc.
6. MS Box Ladder	1 Pc.

* All plastic parts are Roto Moulded.
* The Sizes mentioned are approximate.

Top View

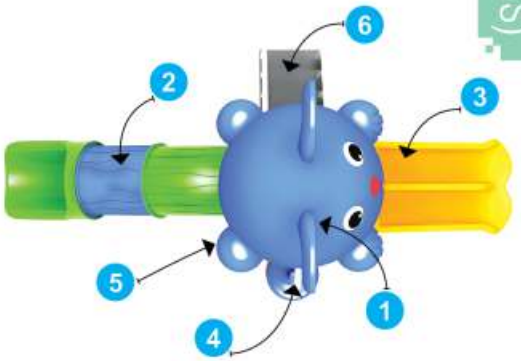

Front View

PACS-20105
Jungle Playcentre

Actual Dimensions	: 20 x 19 x 13 ft.
Recommended Area	: 23 x 22 ft.
Age Group	: 6 - 12 Years

NEW PRODUCT

Back View

Product Descriptions

1. Animal Shaped Roof	1 Pc.
2. Flower	1 Pc.
3. Leaf	1 Pc.
4. Tunnel Slider	3' Ht. 1 Pc.
5. Double Slider with Entrance	3' Ht. 1 Pc.
6. Single Slider	3' Ht. 1 Pc.
7. Panel	1 Pc.
8. MS Perforated Sq. Deck	2 Pc.
9. MS Bridge	1 Pc.
10. MS Box Ladder	1 Pc.

* All plastic parts are Roto Moulded.
* The Sizes mentioned are approximate.

Top View

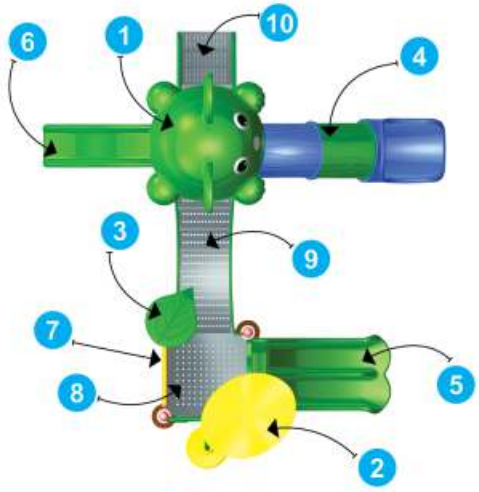

PACS-20106
Castle Play Max

Actual Dimensions	: 21 x 16 x 14 ft.
Recommended Area	: 24 x 19 ft.
Age Group	: 6 - 12 Years

Front View

NEW PRODUCT

Back View

Product Descriptions

1. Conical Shaped Roof	1 Pc.
2. Leaf	1 Pc.
3. Double Slider with Entrance	3' Ht. 1 Pc.
4. Single Slider	3' Ht. 1 Pc.
5. Panel	2 Pcs.
6. MS Perforated Sq. Deck	2 Pc.
7. MS Box Ladder	1 Pc.
8. MS Step Hopper	1 Pc.

* All plastic parts are Roto Moulded.
* The Sizes mentioned are approximate.

Top View

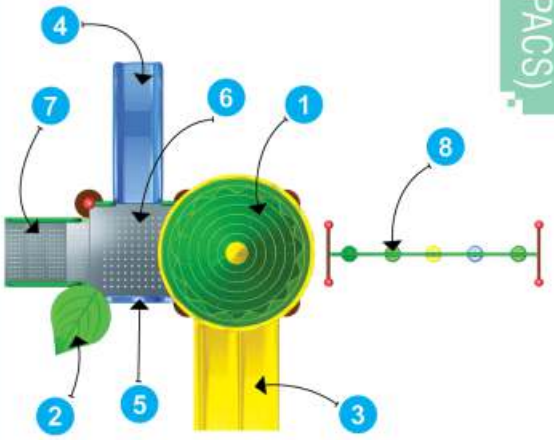

Front View

PACS-20107
Ultra Castle Palace

Actual Dimensions	: 21 x 12 x 14.5 ft.
Recommended Area	: 24 x 15 ft.
Age Group	: 6 - 12 Years

NEW PRODUCT

Back View

Product Descriptions

1. Conical Shaped Roof	1 Pc.
2. Leaf	1 Pc.
3. Spiral Slider	5' Ht. 1 Pc.
4. Double Slider with Entrance	3' Ht. 1 Pc.
5. Panel	3 Pcs.
6. MS Perforated Sq. Deck	2 Pcs.
7. MS Box Ladder	1 Pc.

* All plastic parts are Roto Moulded.
* The Sizes mentioned are approximate.

Top View

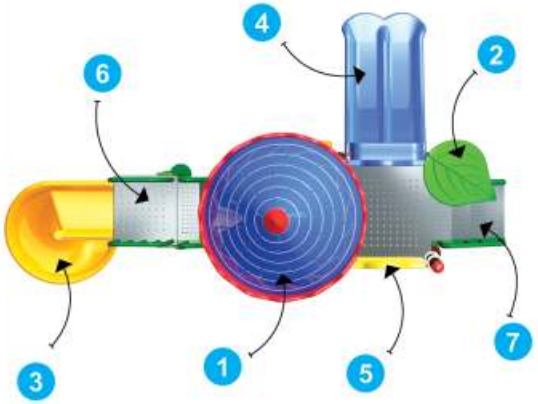

Follow Us On :

Front View

PACS-20108
Climb N Swing Playcentre

Actual Dimensions	: 25 x 24 x 13 ft.
Recommended Area	: 28 x 27 ft.
Age Group	: 6 - 12 Years

NEW PRODUCT

Back View

Product Descriptions

1. U Shaped Roof	1 Pc.
2. Leaf	1 Pc.
3. Tunnel Slider	3' Ht. 1 Pc.
4. Spiral Slider	5' Ht. 1 Pc.
5. Panel	1 Pc.
6. Entrance Stepper	1 Pc.
7. MS Perforated Sq. Deck	2 Pcs.
8. MS Bridge	1 Pc.
9. MS Box Ladder	1 Pc.
10. MS Swing Set 2 Seater	1 Pc.

* All plastic parts are Roto Moulded.
* The Sizes mentioned are approximate.

Top View

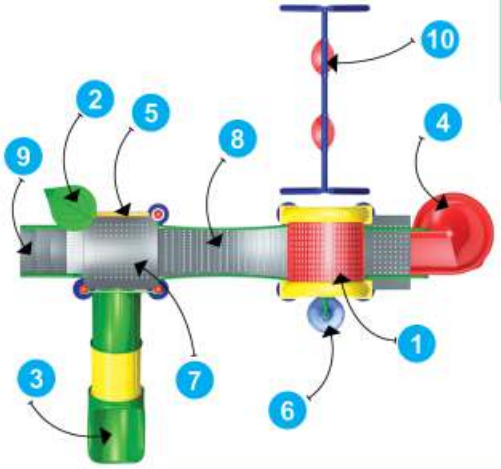

Front View

PACS-20109
Fun Playcentre

Actual Dimensions	: 22 x 12 x 12 ft.
Recommended Area	: 25 x 15 ft.
Age Group	: 6 - 12 Years

NEW PRODUCT

Back View

Product Descriptions

1. Jumbo Hut Roof	1 Pc.
2. Flower	1 Pc.
3. Tunnel Slider	3' Ht. 1 Pc.
4. Double Slider with Entrance	3' Ht. 1 Pc.
5. Panel	2 Pc.
6. MS Perforated Sq. Deck	2 Pcs.
7. MS Box Ladder	1 Pc.
8. Monkey Bar	1 Pc.

* All plastic parts are Roto Moulded.
* The Sizes mentioned are approximate.

Top View

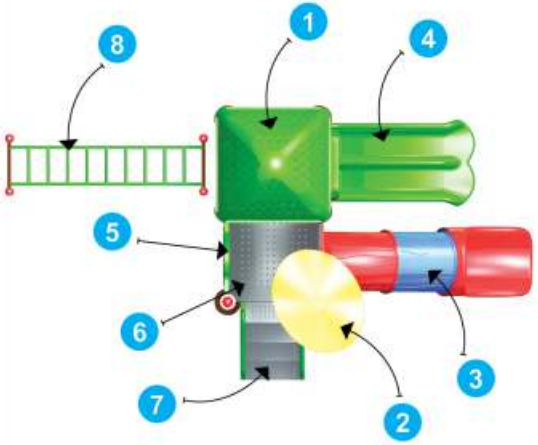

Follow Us On :

Front View

PACS-20110	Actual Dimensions	: 21 x 21 x 14 ft.
Fun N Slide Playcentre	Recommended Area	: 24 x 24 ft.
	Age Group	: 6 - 12 Years

NEW PRODUCT

Back View

Product Descriptions

1. Animal Shaped Roof	1 Pc.
2. Flower	1 Pc.
3. Spiral Slider	5' Ht. 1 Pc.
4. Double Slider with Entrance	3' Ht. 1 Pc.
5. Panel	2 Pcs.
6. MS Perforated Sq. Deck	3 Pcs.
7. MS Box Ladder	1 Pc.
8. MS Swing Set 2 Seater	1 Pc.

* All plastic parts are Roto Moulded.
* The Sizes mentioned are approximate.

Top View

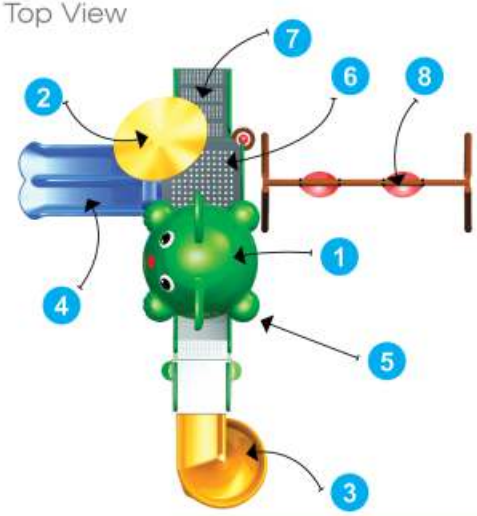

PACS-20111
Jungle Playcentre Sr.

Actual Dimensions	: 30 x 13 x 12 ft.
Recommended Area	: 33 x 16 ft.
Age Group	: 6 - 12 Years

Front View

NEW PRODUCT

Back View

Product Descriptions

1. Animal Shaped Roof	2 Pcs.
2. Double Slider with Entrance	3' Ht. 1 Pc.
3. Single Slider	3' Ht. 1 Pc.
4. Panel	1 Pc.
5. Entrance Stepper	1 Pc.
6. MS Perforated Sq. Deck	2 Pcs.
7. MS Bridge	1 Pc.
8. MS Box Ladder	1 Pc.
9. MS Step Hopper	1 Pc.

* All plastic parts are Roto Moulded.
* The Sizes mentioned are approximate.

Top View

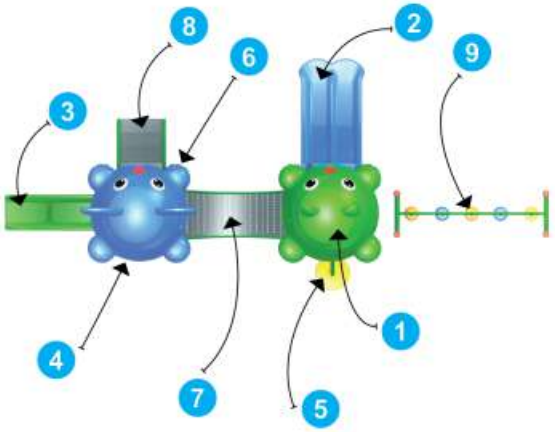

Follow Us On :

Front View

PACS-20112 ***Hop N Slide Playcentre***	**Actual Dimensions**	**: 25 x 15 x 16 ft.**
	Recommended Area	**: 28 x 18 ft.**
	Age Group	**: 6 - 12 Years**

NEW PRODUCT

Back View

Product Descriptions

1. U Shaped Roof	1 Pc.
2. Flower	1 Pc.
3. Leaf	1 Pc.
4. Tunnel Slider	3' Ht. 1 Pc.
5. Spiral Slider	7' Ht. 1 Pc.
6. Single Slider	5' Ht. 1 Pc.
7. Panel	1 Pc.
8. Entrance Stepper	1 Pc.
9. MS Perforated Sq. Deck	2 Pcs.
10. MS Box Ladder	1 Pc.

* All plastic parts are Roto Moulded.
* The Sizes mentioned are approximate.

Top View

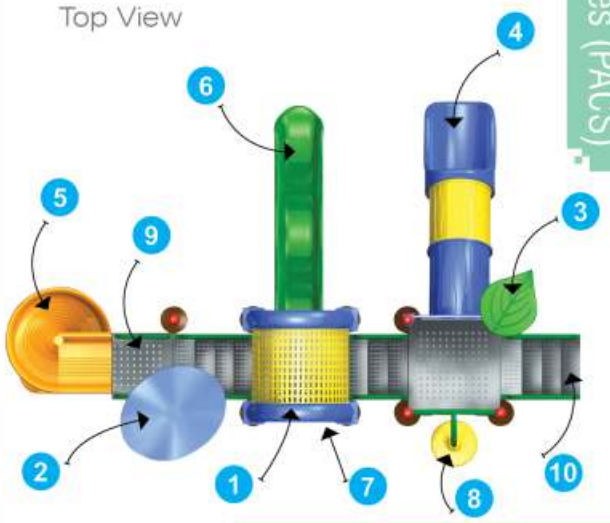

PACS-20113

Parkland Adventure Centre Jr.

Actual Dimensions	: 26 x 23 x 13 ft.
Recommended Area	: 29 x 26 ft.
Age Group	: 6 - 12 Years

Front View

NEW PRODUCT

Back View

Product Descriptions

1. U Shaped Roof	1 Pc.
2. Flower	1 Pc.
3. Spiral Slider	5' Ht. 1 Pc.
4. Double Slider with Entrance	5' Ht. 1 Pc.
5. Single Slider	3' Ht. 1 Pc.
6. Entrance Stepper	1 Pc.
7. MS Perforated Sq. Deck	3 Pcs.
8. MS Box Ladder	1 Pc.
9. MS Monkey Bar	1 Pc.

* All plastic parts are Roto Moulded.
* The Sizes mentioned are approximate.

Top View

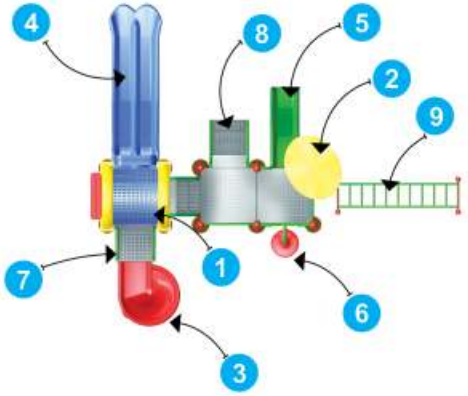

Follow Us On :

Front View

NEW PRODUCT

PACS-20114
Fun Playcentre Sr.

Actual Dimensions	: 25 x 17 x 16 ft.
Recommended Area	: 28 x 20 ft.
Age Group	: 6 - 12 Years

Back View

Product Descriptions

1. Animal Shaped Roof	1 Pc.
2. Flower	1 Pc.
3. Leaf	1 Pc.
4. Spiral Slider	7′ Ht. 1 Pc.
5. Double Slider with Entrance	5′ Ht. 1 Pc.
6. Single Slider	3′ Ht. 1 Pc.
7. Panel	1 Pc.
8. MS Perforated Sq. Deck	2 Pcs.
9. MS Box Ladder	1 Pc.

* All plastic parts are Roto Moulded.
* The Sizes mentioned are approximate.

Top View

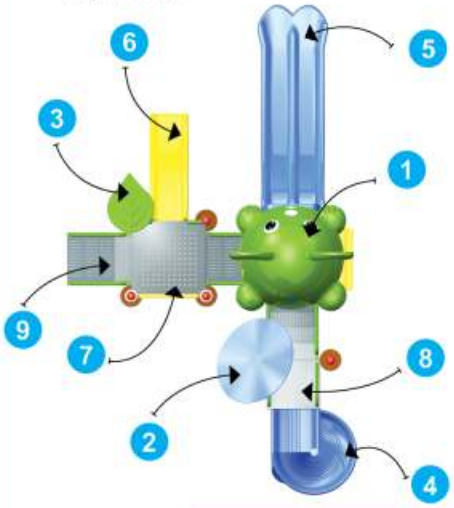

Front View

PACS-20115
Parkland Adventure Centre

Actual Dimensions	: 33 x 14 x 14 ft.
Recommended Area	: 36 x 17 ft.
Age Group	: 6 - 12 Years

NEW PRODUCT

Back View

Product Descriptions

1. Animal Shaped Roof	1 Pc.
2. U Shaped Roof	1 Pc.
3. Flower	1 Pc.
4. Leaf	1 Pc.
5. Spiral Slider	5' Ht. 1 Pc.
6. Double Slider with Entrance	3' Ht. 1 Pc.
7. Single Slider	3' Ht. 1 Pc.
8. MS Perforated Sq. Deck	3 Pcs.
9. MS Bridge	1 Pc.
10. MS Box Ladder	2 Pc.

* All plastic parts are Roto Moulded.
* The Sizes mentioned are approximate.

Top View

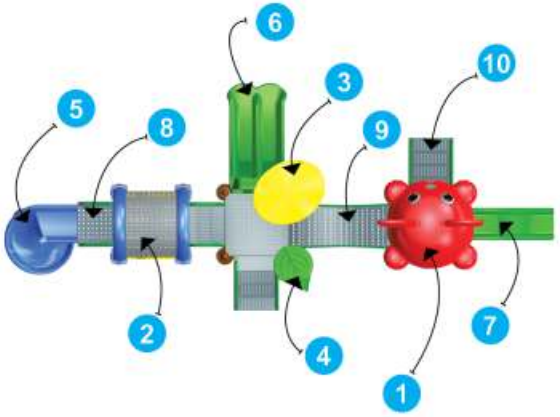

Follow Us On :

Front View

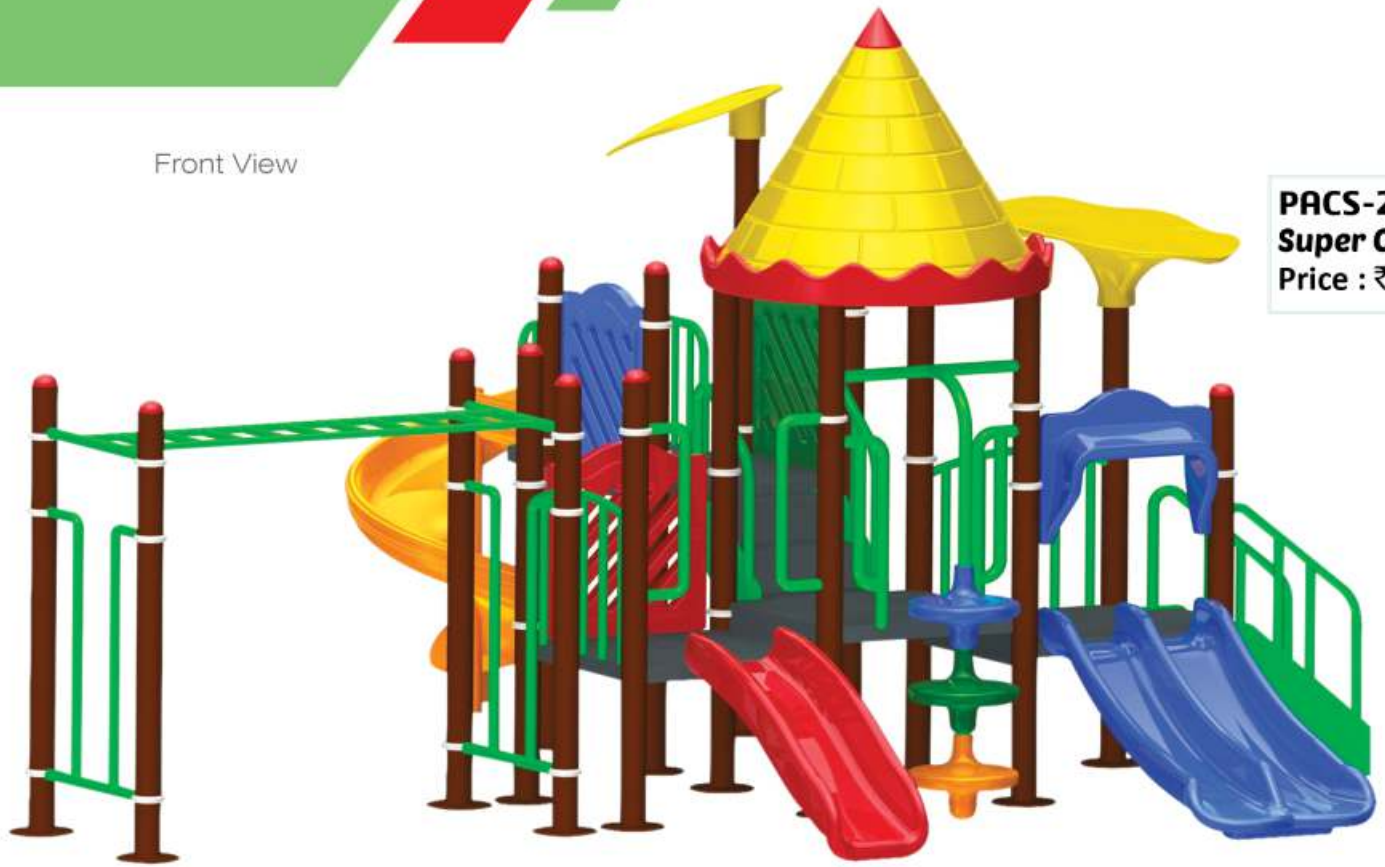

PACS-20116
Super Castle Palace
Price : ₹ 3,94,000/-

Actual Dimensions	: 25 x 24 x 15 ft.
Recommended Area	: 28 x 27 ft.
Age Group	: 6 - 12 Years

NEW PRODUCT

Back View

Product Descriptions

1. Conical Shaped Roof	1 Pc.
2. Flower & Leaf	1 Pc.
3. Spiral Slider	5' Ht. 1 Pc.
4. Double Slider with Entrance	3' Ht. 1 Pc.
5. Single Slider	3' Ht. 1 Pc.
6. Panel	3 Pcs.
7. Entrance Stepper	1 Pc.
8. MS Perforated Sq. Deck	4 Pcs.
9. MS Box Ladder	1 Pc.
10. Monkey Bar	1 Pc.

* All plastic parts are Roto Moulded.
* The Sizes mentioned are approximate.

Top View

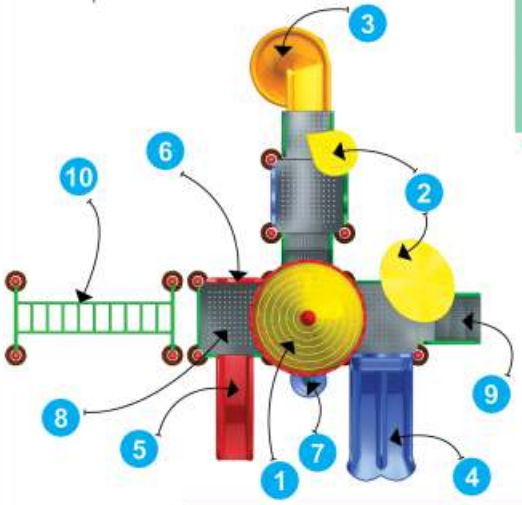

Front View

PACS-20117	Actual Dimensions	: 28 x 20 x 13 ft.
Fun Playcentre Maxi	Recommended Area	: 31 x 23 ft.
	Age Group	: 6 - 12 Years

NEW PRODUCT

Back View

Product Descriptions

1. U Shaped Roof	1 Pc.
2. Flower	1 Pc.
3. Spiral Slider	7' Ht. 1 Pc.
4. Double Slider with Entrance	3' Ht. 1 Pc.
5. Single Slider	3' Ht. 1 Pc.
6. Panel	2 Pcs.
7. Entrance Stepper	1 Pc.
8. MS Perforated Sq. Deck	3 Pcs.
9. MS Box Ladder	1 Pc.
10. MS Swing Set 2 Seater	1 Pc.

* All plastic parts are Roto Moulded.
* The Sizes mentioned are approximate.

Top View

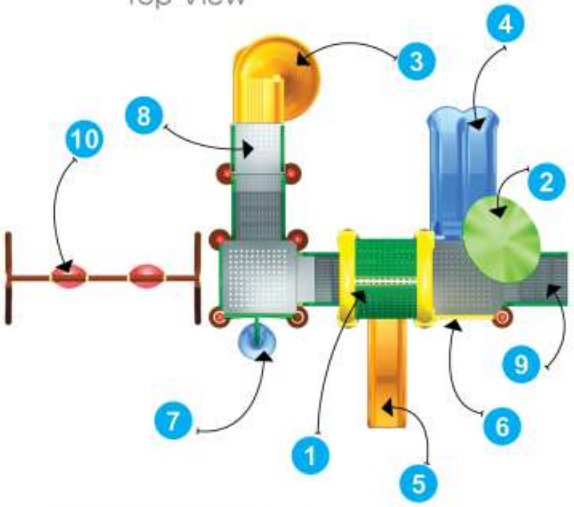

Follow Us On :

Front View

PACS-20118	Actual Dimensions	: 32 x 14 x 16 ft.
Dream Castle Playcentre	Recommended Area	: 35 x 17 ft.
	Age Group	: 6 - 12 Years

NEW PRODUCT

Playground Activity Centre Series (PACS)

Back View

Product Descriptions

1. Conical Shaped Roof	1 Pc.
2. Jumbo Hut Shaped Roof	1 Pc.
3. Flower & Leaf	1 Pc.
4. Spiral Slider	7' Ht. 1 Pc.
5. Double Slider with Entrance	3' Ht. 1 Pc.
6. Single Slider	5' Ht. 1 Pc.
7. Tunnel Bridge	1 Pc.
8. Entrance Stepper	1 Pc.
9. MS Perforated Sq. Deck	3 Pcs.
10. MS Box Ladder	1 Pc.

* All plastic parts are Roto Moulded.
* The Sizes mentioned are approximate.

Top View

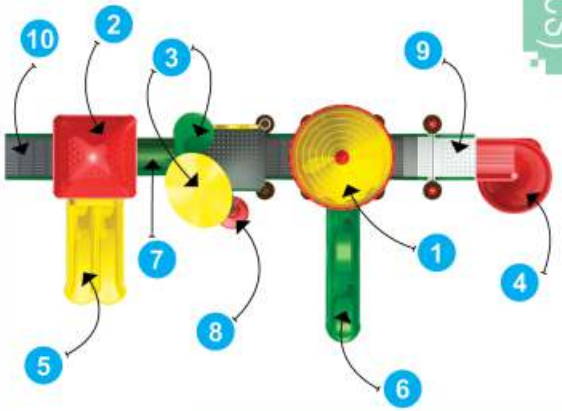

Front View

PACS-20119
Jumbo Galaxy Centre

Actual Dimensions	: 38 x 17.5 x 14 ft.
Recommended Area	: 41 x 20 ft.
Age Group	: 6 - 12 Years

NEW PRODUCT

Back View

Product Descriptions

1. Animal Shaped Roof	1 Pc.
2. U Shaped Roof	1 Pc.
3. Spiral Slider	5' Ht. 1 Pc.
4. Double Slider with Entrance	5' Ht. 1 Pc.
5. Plastic Bench	1 Pc.
6. Entrance Stepper	1 Pc.
7. MS Perforated Sq. Deck	3 Pcs.
8. MS Box Ladder	1 Pc.
9. MS Swing Set 2 Seater	1 Pc.
10. MS Net Climber	1 Pc.

* All plastic parts are Roto Moulded.
* The Sizes mentioned are approximate.

Top View

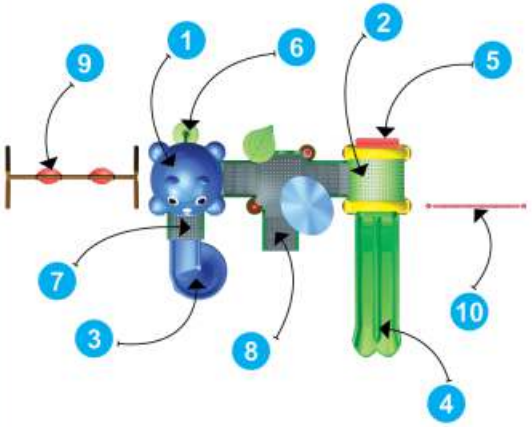

Follow Us On :

PACS-20120
Circus Playcentre

Actual Dimensions	: 39 x 23 x 15 ft.
Recommended Area	: 42 x 26 ft.
Age Group	: 6 - 12 Years

Front View

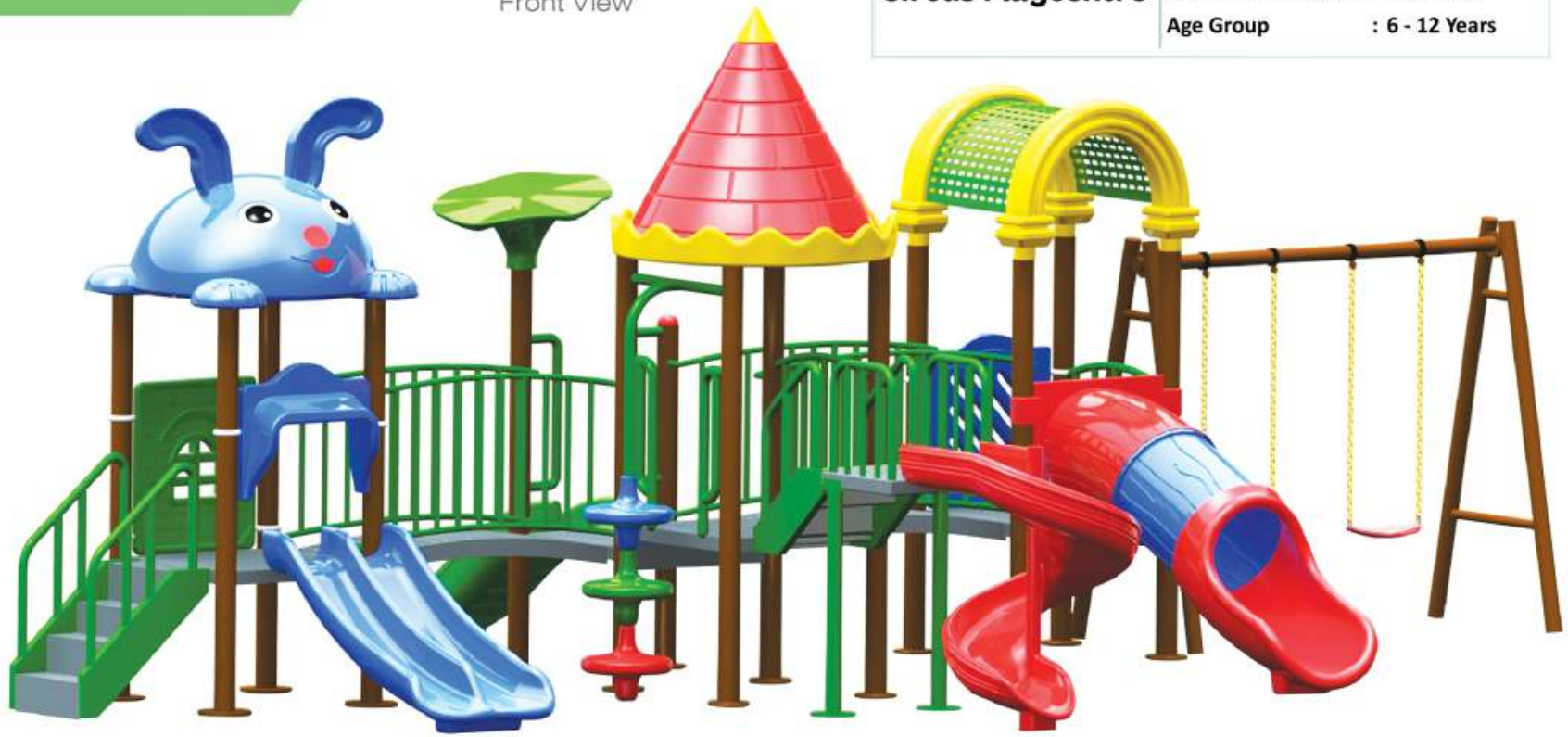

NEW PRODUCT

Back View

Product Descriptions

1. Animal Shaped Roof	1 Pc.
2. Conical Shaped Roof	1 Pc.
3. U Shaped Roof	1 Pc.
4. Tunnel Slider	3' Ht. 1 Pc.
5. Spiral Slider	5' Ht. 1 Pc.
6. Double Slider with Entrance	3' Ht. 1 Pc.
7. Single Slider	3' Ht. 1 Pc.
8. MS Perforated Sq. Deck	4 Pcs.
9. MS Bridge	2 Pcs.
10. MS Swing Set 2 Seater	1 Pc.

* All plastic parts are Roto Moulded.
* The Sizes mentioned are approximate.

Top View

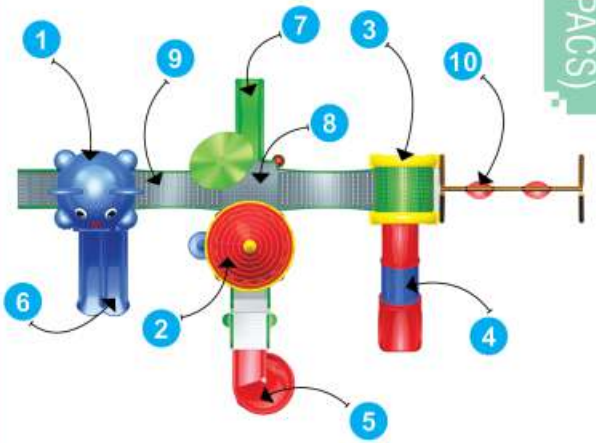

PACS-20121
Castle Adventure Centre

Actual Dimensions	: 34 x 21 x 14 ft.
Recommended Area	: 37 x 24 ft.
Age Group	: 6 - 12 Years

NEW PRODUCT

Front View

Back View

Product Descriptions

1. Conical Shaped Roof	1 Pc.
2. Flower & Leaf	2 Pcs.
3. Spiral Slider	5' Ht. 1 Pc.
4. Double Slider with Entrance	3' Ht. 1 Pc.
5. Single Slider	3' Ht. 1 Pc.
6. Panel	5 Pcs.
7. Entrance Stepper	1 Pc.
8. MS Perforated Sq. Deck	5 Pcs.
9. MS Box Ladder	2 Pcs.
10. MS Swing Set 2 Seater	1 Pc.

* All plastic parts are Roto Moulded.
* The Sizes mentioned are approximate.

Top View

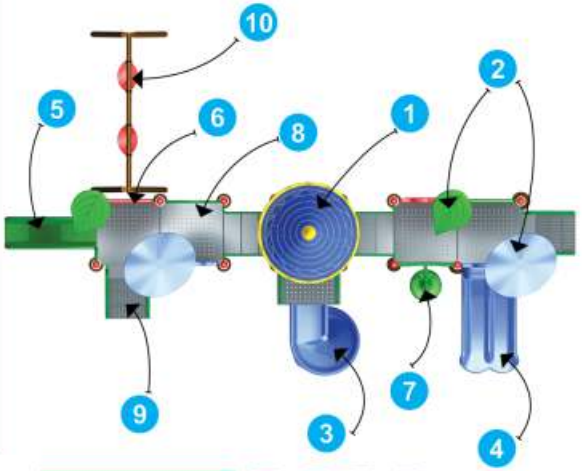

Follow Us On :

PACS-20122

Parkland Adventure Centre Sr.

Actual Dimensions	: 36 x 24 x 16 ft.
Recommended Area	: 39 x 27 ft.
Age Group	: 6 - 12 Years

Front View

NEW PRODUCT

Back View

Product Descriptions

1. Animal Shaped Roof	1 Pc.
2. Jumbo Hut Shaped Roof	1 Pc.
3. Tunnel Slider	3' Ht. 1 Pc.
4. Spiral Slider	7' Ht. 1 Pc.
5. Double Slider with Entrance	5' Ht. 1 Pc.
6. Single Slider	5' Ht. 1 Pc.
7. MS Perforated Sq. Deck	3 Pcs.
8. MS Bridge	1 Pc.
9. MS Box Ladder	1 Pc.
10. MS Net Climber	1 Pc.

* All plastic parts are Roto Moulded.
* The Sizes mentioned are approximate.

Top View

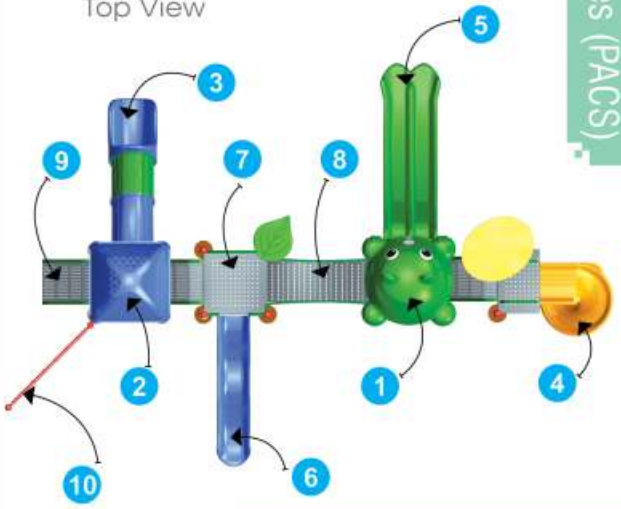

PACS-20123

Jumbo Web Castle Playcentre

Actual Dimensions	: 66.5 x 41 x 18.9 ft.
Recommended Area	: 70 x 44 ft.
Age Group	: 6 - 12 Years

NEW PRODUCT

Front View

Back View

Product Descriptions

1. Conical Shaped Roof	6 Pcs.
2. Flower & Leaf	3 Pcs.
3. Tunnel Slider	5' Ht. 1 Pc.
4. Spiral Slider	7' Ht. 1 Pc.
5. Spiral Slider	5' Ht. 2 Pcs.
6. Double Slider with Entrance	3' Ht. 2 Pcs.
7. Single Slider	5' Ht. 2 Pcs.
8. Triple Slide	5' Ht. 1 Pc.
9. MS Perforated Sq. Deck	12 Pcs.
10. MS Box Ladder	4 Pcs.
11. Plastic Bench	3 Pcs.

* All plastic parts are Roto Moulded.
* The Sizes mentioned are approximate.

Top View

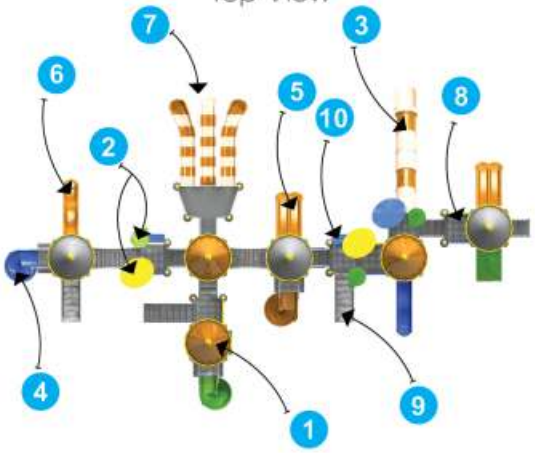

Follow Us On :

Front View

PACS-20124	Actual Dimensions	: 43.3 x 40.8 x 19 ft.
Adventure House Playcentre	Recommended Area	: 46 x 44 ft.
	Age Group	: 6 - 12 Years

NEW PRODUCT

Back View

Product Descriptions

1. Conical Shaped Roof	1 Pc.
2. Animal Shaped Roof	1 Pc.
3. Jumbo Hut Shaped Roof	1 Pc.
4. Flower & Leaf	1 Pc.
5. Triple Slide	5' Ht. 1 Pc.
6. Part Slide	3' Ht. 1 Pc.
7. Wavy Slider	5' Ht. 1 Pc.
8. Double Slider with Entrance	3' Ht. 1 Pc.
9. Tunnel Slider	7' Ht. 1 Pc.
10. Spiral Slider	7' Ht. 1 Pc.

* All plastic parts are Roto Moulded.
* The Sizes mentioned are approximate.

Top View

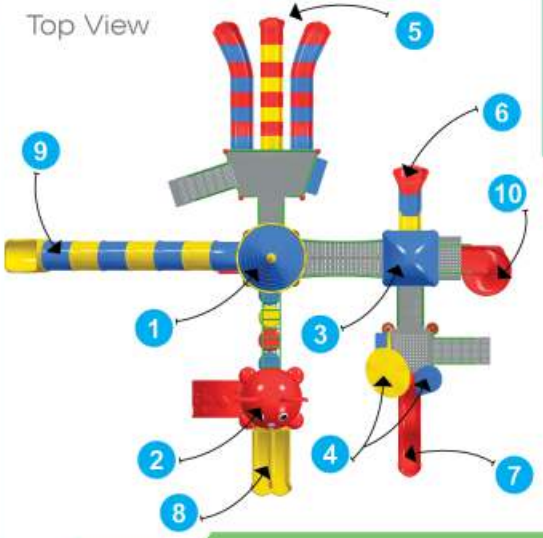

GGAS-16101
Tunnel House Playzone

Actual Dimensions	: 22.9 x 22.9 x 13 ft.
Recommended Area	: 26 x 26 ft.
Age Group	: 6 - 12 Years

Front View

Product Descriptions

1. UFO Roof	1 Pc.
2. Single UFO Roof	2 Pcs.
3. Tunnel Slider	5' Ht. 1 Pc.
4. Double Slider	5' Ht. 1 Pc.
5. Single Slider	5' Ht. 1 Pc.
6. Ring Tunnel	2 Pcs.
7. MS Perforated Sq. Deck	3 Pcs.
8. Step Ladder	1 Pc.
9. Curved Ladder	1 Pc.

* All plastic parts are Roto Moulded.
* The Sizes mentioned are approximate.

Back View

Top View

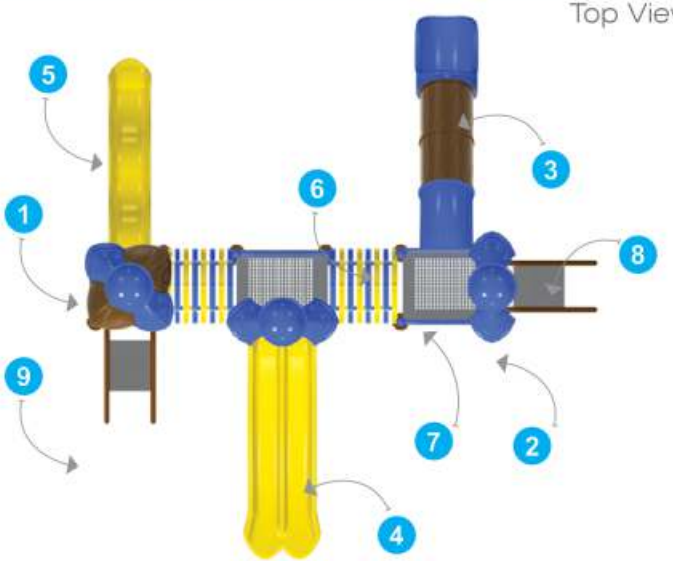

Follow Us On :

GGAS-16102	**Actual Dimensions**	**: 27.9 x 22.9 x 11.5 ft.**
Club House Playzone	**Recommended Area**	**: 31.5 x 26.5 ft.**
	Age Group	**: 6 - 12 Years**

grokids™ Outdoor Play Equipments

Front View

Product Descriptions

1. Cat Shaped Roof	1 Pc.
2. Hut Shaped Roof	1 Pc.
3. Tunnel Slider	5′ Ht. 1 Pc.
4. Spiral Slider	5′ Ht. 1 Pc.
5. Single Slider	5′ Ht. 1 Pc.
6. Panel	1 Pc.
7. MS Perforated Sq. Deck	2 Pcs.
8. MS Bridge	1 Pc.
9. MS Box Ladder	1 Pc.
10. MS Step Ladder	1 Pc.
11. MS Swing Set 2 Seater	1 Pc.

* All plastic parts are Roto Moulded.
* The Sizes mentioned are approximate.

Back View

Top View

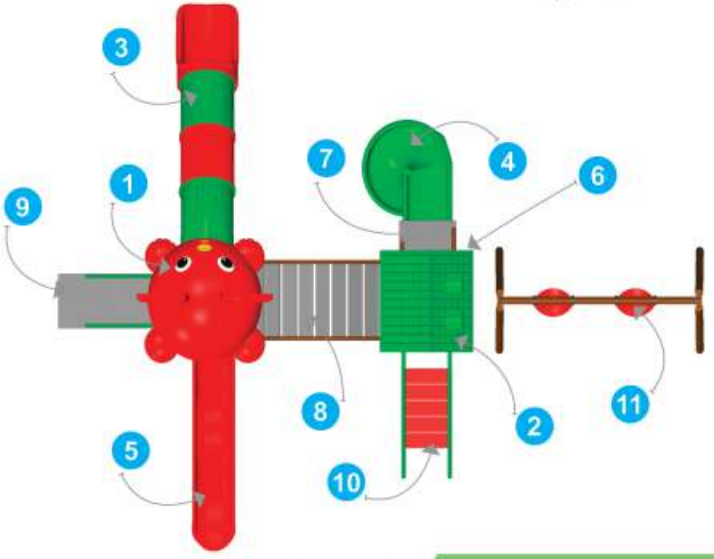

Grokids Garden Activity Series (GGAS)

GGAS-16103
Tree House Playzone

Actual Dimensions	: 20.5 x 20.5 x 14 ft.
Recommended Area	: 23 x 23 ft.
Age Group	: 6 - 12 Years

Front View

Product Descriptions

1. Hut Shaped Roof	2 Pcs.
2. Single Curved Roof	1 Pc.
3. Flower	1 Pc.
4. Leaf	1 Pc.
5. Single Slider	5' Ht. 1 Pc.
6. Part Slider	5' Ht. 2 Pcs.
7. Panel	4 Pcs.
8. MS Perforated Sq. Deck	4 Pcs.
9. MS Bridge	1 Pc.
10. MS Box Ladder	1 Pc.
11. MS Step Ladder	1 Pc.

* All plastic parts are Roto Moulded.
* The Sizes mentioned are approximate.

Back View

Top View

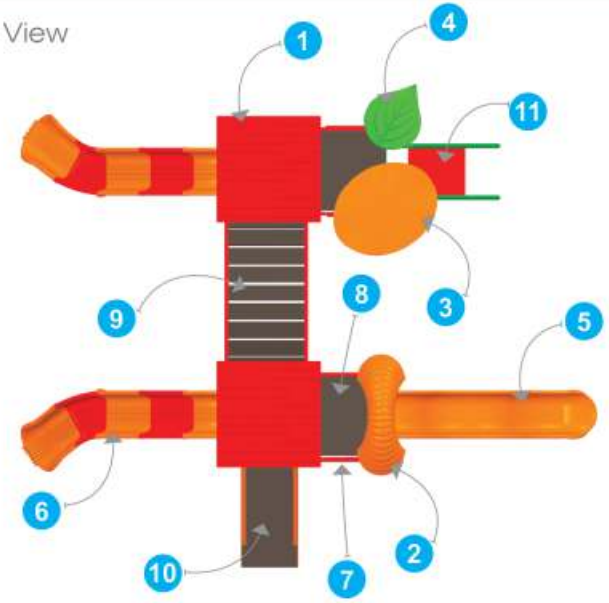

Follow Us On :

GGAS-16104
UFO Playzone

Actual Dimensions	: 26.2 x 24.6 x 13.9 ft.
Recommended Area	: 29 x 27 ft.
Age Group	: 6 - 12 Years

Outdoor Play Equipments

Front View

Product Descriptions

1. UFO Roof	3 Pcs.
2. Single UFO Roof	1 Pc.
3. Tunnel Slider	5′ Ht. 1 Pc.
4. Single Slider	5′ Ht. 1 Pc.
5. Part Slider	5′ Ht. 1 Pc.
6. Panel	8 Pcs.
7. Ring Tunnel	1 Pc.
8. MS Perforated Sq. Deck	6 Pcs.
9. Step Ladder	1 Pc.
10. Curved Ladder	1 Pc.

* All plastic parts are Roto Moulded.
* The Sizes mentioned are approximate.

Back View

Top View

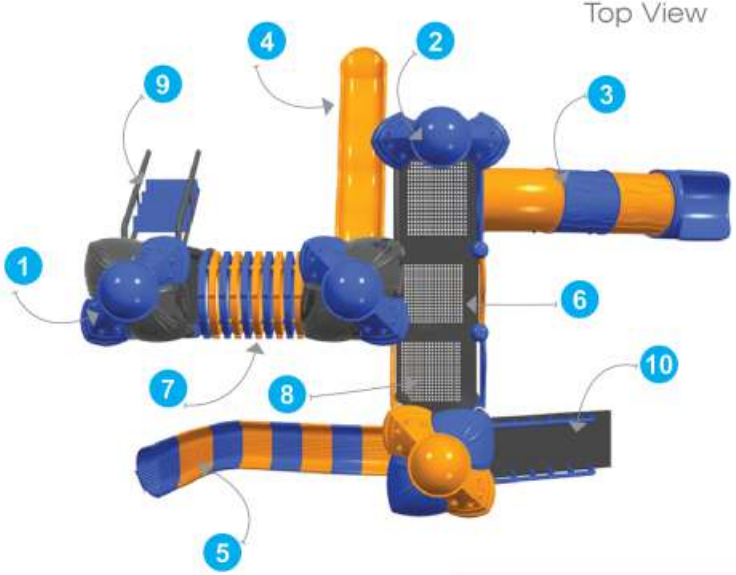

Grokids Garden Activity Series (GGAS)

GGAS-16106	**Actual Dimensions**	**: 44.3 x 21.3 x 11.5 ft.**
Jungle Rumble Playzone	**Recommended Area**	**: 48 x 25 ft.**
	Age Group	**: 6 - 12 Years**

Front View

Product Descriptions

1. Hut Shaped Roof	2 Pcs.
2. Single Curved Roof	3 Pcs.
3. Tunnel Slider	3' Ht. 1 Pc.
4. Spiral Slider	5' Ht. 1 Pc.
5. Double Slider	5' Ht. 1 Pc.
6. Single Slider	5' Ht. 1 Pc.
7. Jr. Single Slider	1 Pc.
8. Plastic Stair	1 Pc.
9. MS Perforated Sq. Deck	4 Pcs.
10. MS Bridge	2 Pc.
11. MS Box Ladder	1 Pc.
12. MS Net Climber	1 Pc.

* All plastic parts are Roto Moulded.
* The Sizes mentioned are approximate.

Back View

Top View

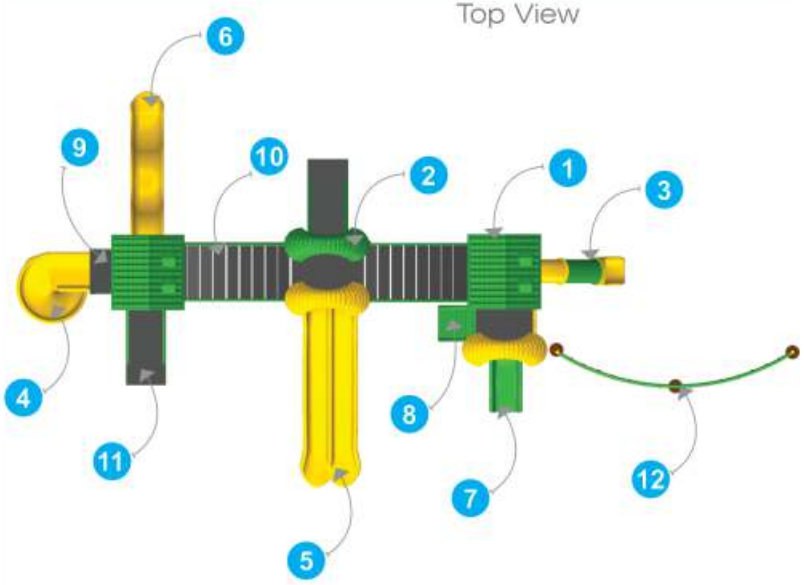

Follow Us On :

GGAS-16107
Space Ship Playzone

Actual Dimensions	: 37.7 x 24.5 x 14.5 ft.
Recommended Area	: 41 x 28 ft.
Age Group	: 6 - 12 Years

grokids™ Outdoor Play Equipments

Front View

Product Descriptions

1. UFO Roof		2 Pcs.
2. Single UFO Roof		2 Pcs.
3. Tunnel Slider	7' Ht.	1 Pc.
4. Spiral Slider	5' Ht.	1 Pc.
5. Double Slider	5' Ht.	1 Pc.
6. Jr. Single Slider		1 Pc.
7. Panel		5 Pcs.
8. Plastic Stair		1 Pc.
9. MS Perforated Sq. Deck		3 Pcs.
10. MS Bridge		1 Pc.
11. MS Box Ladder		1 Pc.
12. MS Step Ladder		1 Pc.
13. Plastic Step Hopper		1 Pc.
14. MS Swing Set 2 Seater		1 Pc.

* All plastic parts are Roto Moulded.
* The Sizes mentioned are approximate.

Back View

Top View

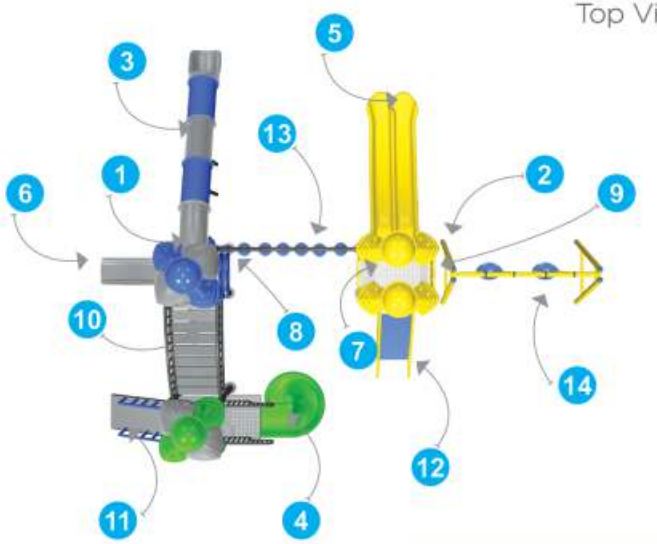

Grokids Garden Activity Series (GGAS)

GGAS-16109
Smart House Playzone
Price : ₹ 6,09,800/-

Actual Dimensions	: 36 x 29.5 x 13.1 ft.
Recommended Area	: 39.5 x 33 ft.
Age Group	: 6 - 12 Years

Front View

Product Descriptions

1. UFO Roof	3 Pcs.
2. Single Curved Roof	2 Pcs.
3. Tunnel Slider	5' Ht. 1 Pc.
4. Spiral Slider	5' Ht. 1 Pc.
5. Double Slider	5' Ht. 1 Pc.
6. Single Slider	5' Ht. 2 Pcs.
7. Panel	8 Pcs.
8. MS Perforated Sq. Deck	5 Pcs.
9. MS Bridge	1 Pc.
10. MS Box Ladder	2 Pcs.
11. MS Loop Set	1 Pc.

* All plastic parts are Roto Moulded.
* The Sizes mentioned are approximate.

Back View

Top View

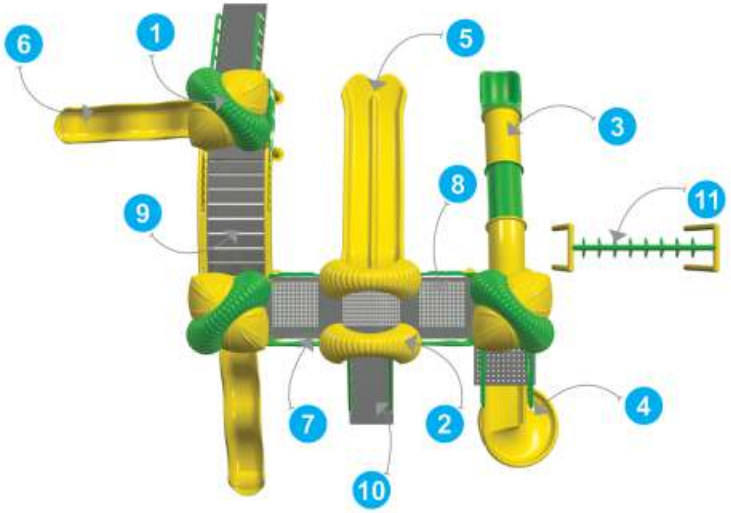

Follow Us On :

GGAS-16110
Wavy Slide Combo Playzone

Actual Dimensions	: 17 x 23 x 14 ft.
Recommended Area	: 20 x 26 ft.
Age Group	: 6 - 12 Years

Front View

Product Descriptions

1. UFO Roof	3 Pcs.
2. Part Slider	5' Ht. 3 Pcs.
3. Jr. Single Slider	1 Pc.
4. Panel	10 Pcs.
5. Ring Tunnel	1 Pc.
6. Plastic Stair	1 Pc.
7. MS Perforated Sq. Deck	8 Pcs.
8. MS Box Ladder	1 Pc.
9. MS Step Ladder	1 Pc.

* All plastic parts are Roto Moulded.
* The Sizes mentioned are approximate.

Back View

Top View

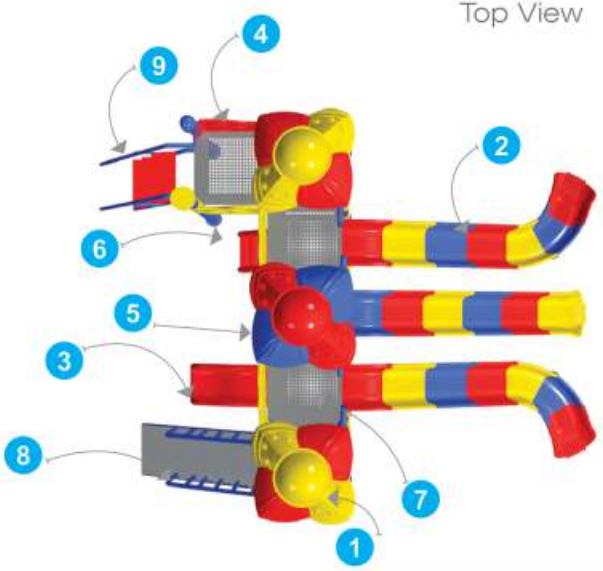

GGAS-16112
Kids Combo Playzone

Actual Dimensions	: 23.7 x 26.2 x 13 ft.
Recommended Area	: 26.7 x 29 ft.
Age Group	: 6 - 12 Years

Front View

Product Descriptions

1. Hut Shaped Roof	2 Pcs.
2. Single Curved Roof	2 Pcs.
3. Leaf	1 Pc.
4. Tunnel Slider	7' Ht. 1 Pc.
5. Spiral Slider	5' Ht. 1 Pc.
6. Double Slider	5' Ht. 1 Pc.
7. Panel	5 Pcs.
8. MS Perforated Sq. Deck	5 Pcs.
9. MS Bridge	1 Pc.
10. MS Box Ladder	1 Pc.
11. MS Step Ladder	1 Pc.

* All plastic parts are Roto Moulded.
* The Sizes mentioned are approximate.

Back View

Top View

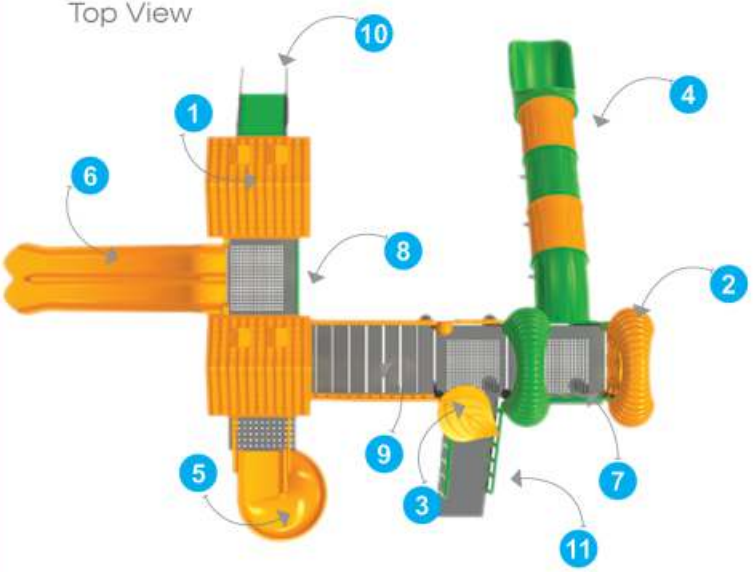

Follow Us On :

GGAS-16113
Super Max Playzone

Actual Dimensions	: 39.3 x 27.9 x 14 ft.
Recommended Area	: 43 x 31 ft.
Age Group	: 6 - 12 Years

Front View

Product Descriptions

1. UFO Roof	2 Pcs.
2. Curved Roof	4 Pcs.
3. Tunnel Slider	5' Ht. 1 Pc.
4. Spiral Slider	5' Ht. 1 Pc.
5. Double Slider	5' Ht. 1 Pc.
6. Single Slider	5' Ht. 1 Pc.
7. Panel	10 Pcs.
8. Tunnel Bridge	2 Pc.
9. MS Perforated Sq. Deck	8 Pcs.
10. MS Box Ladder	3 Pc.
11. MS Swing Set 2 Seater	1 Pc.

* All plastic parts are Roto Moulded.
* The Sizes mentioned are approximate.

Back View

Top View

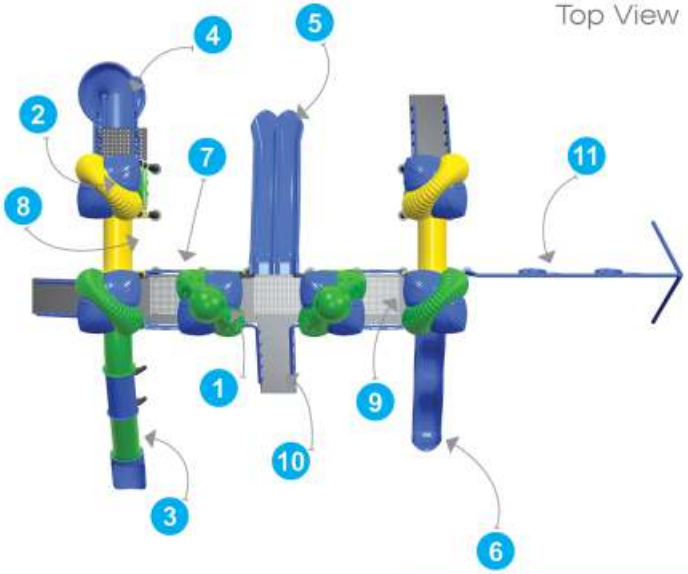

GGAS-16114
Kids Super Playzone

Actual Dimensions	: 31.5 x 22.6 x 12.5 ft.
Recommended Area	: 34.5 x 25.6 ft.
Age Group	: 6 - 12 Years

Front View

Product Descriptions

1. Hut Shaped Roof	1 Pc.
2. Single Curved Roof	1 Pc.
3. Tunnel Slider	5' Ht. 1 Pc.
4. Spiral Slider	5' Ht. 1 Pc.
5. Single Slider	5' Ht. 1 Pc.
6. Panel	2 Pcs.
7. MS Perforated Sq. Deck	2 Pcs.
8. MS Step Ladder	1 Pc.
9. MS Net Climber	1 Pc.

* All plastic parts are Roto Moulded.
* The Sizes mentioned are approximate.

Back View

Top View

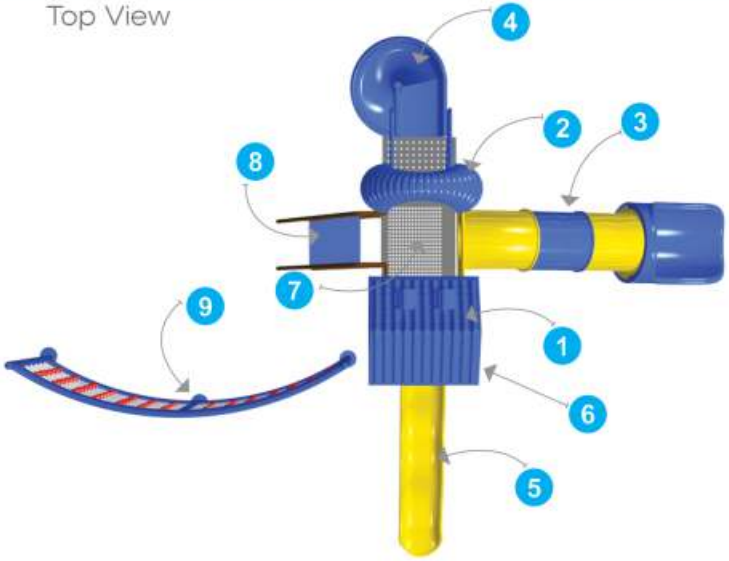

Follow Us On :

GGAS-16115
Super Space Playzone

Actual Dimensions	: 27.2 x 13.1 x 15 ft.
Recommended Area	: 30.2 x 16 ft.
Age Group	: 6 - 12 Years

Front View

Product Descriptions

1. UFO Roof	2 Pcs.
2. Spiral Slider	7' Ht. 1 Pc.
3. Double Slider	5' Ht. 1 Pc.
4. Part Slider	1 Pc.
5. Panel	5 Pcs.
6. Tunnel Bridge	1 Pc.
7. MS Perforated Sq. Deck	4 Pcs.
8. MS Box Ladder	1 Pc.

* All plastic parts are Roto Moulded.
* The Sizes mentioned are approximate.

Back View

Top View

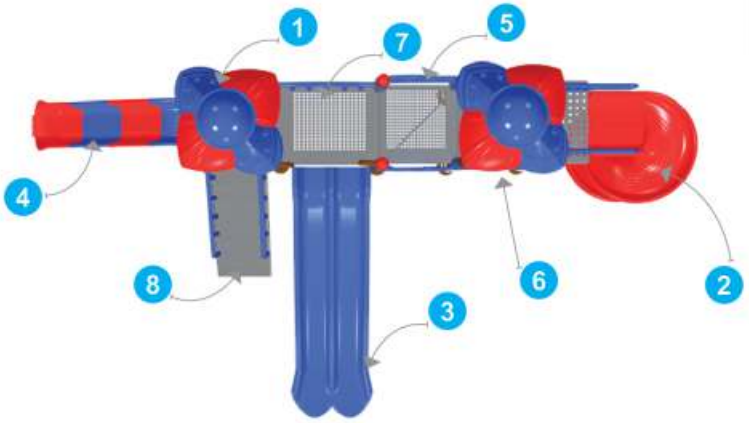

GGAS-16116
Tri Dump Playzone

Actual Dimensions	: 23.3 x 32.5 x 13.1 ft.
Recommended Area	: 26.5 x 35.5 ft.
Age Group	: 6 - 12 Years

Front View

Product Descriptions

1. Curved Roof	2 Pcs.
2. Curved Single Roof	2 Pcs.
3. Flower	1 Pc.
4. Leaf	1 Pc.
5. Tunnel Slider	5' Ht. 1 Pc.
6. Spiral Slider	5' Ht. 1 Pc.
7. Double Slider	5' Ht. 1 Pc.
8. Part Slider	7' Ht. 1 Pc.
9. Panel	4 Pcs.
10. MS Perforated Sq. Deck	4 Pcs.
11. MS Bridge	2 Pcs.
12. MS Box Ladder	1 Pc.
13. MS Step Ladder	1 Pc.

* All plastic parts are Roto Moulded.
* The Sizes mentioned are approximate.

Back View

Top View

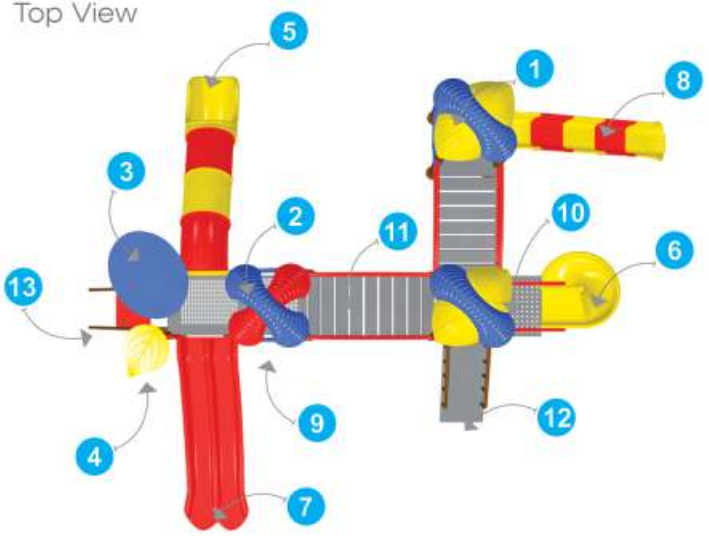

Follow Us On :

GGAS-16117
Super Max Playzone

Actual Dimensions	: 33.8 x 32.1 x 13.5 ft.
Recommended Area	: 37 x 35 ft.
Age Group	: 6 - 12 Years

Front View

Product Descriptions

1. Hut Shaped Roof		2 Pcs.
2. Curved Single Roof		1 Pc.
3. Flower & Leaf		1 Pc.
4. Tunnel Slider	7' Ht.	1 Pc.
5. Double Slider	5' Ht.	1 Pc.
6. Single Slider		1 Pc.
7. Part Slider	7' Ht.	1 Pc.
8. MS Perforated Sq. Deck		5 Pcs.
9. MS Bridge		1 Pc.
10. MS Box Ladder		1 Pc.
11. MS Step Ladder		1 Pc.
12. MS Net Climber		1 Pc.
13. MS Loop Set		1 Pc.

* All plastic parts are Roto Moulded.
* The Sizes mentioned are approximate.

Back View

Top View

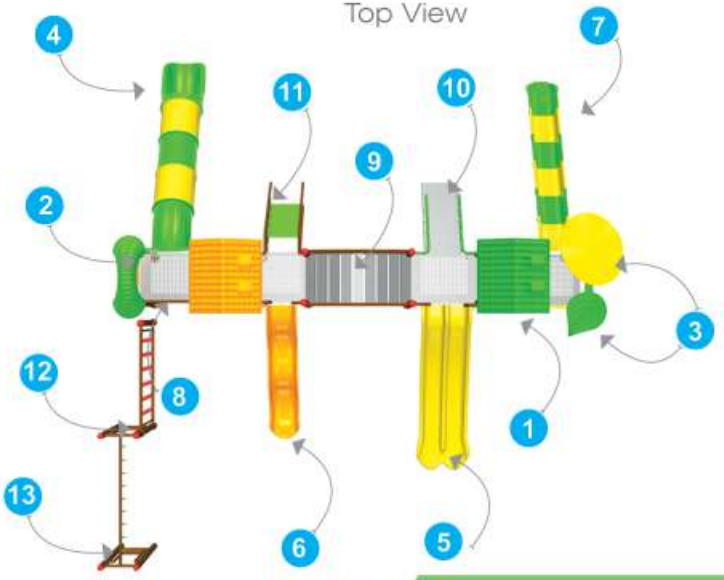

GGAS-16118
Castle Maxi Playzone

Actual Dimensions	: 23.6 x 26.2 x 16.7 ft.
Recommended Area	: 26.6 x 29.2 ft.
Age Group	: 6 - 12 Years

Front View

Product Descriptions

1. UFO Roof	1 Pc.
2. Single UFO Roof	2 Pcs.
3. Tunnel Slider	5' Ht. 1 Pc.
4. Spiral Slider	7' Ht. 1 Pc.
5. Double Slider	5' Ht. 1 Pc.
6. Single Slider	5' Ht. 1 Pc.
7. Panel	6 Pcs.
8. Tunnel Bridge	1 Pc.
9. MS Perforated Sq. Deck	5 Pcs.
10. MS Box Ladder	1 Pc.
11. MS Step Ladder	1 Pc.

* All plastic parts are Roto Moulded.
* The Sizes mentioned are approximate.

Back View

Top View

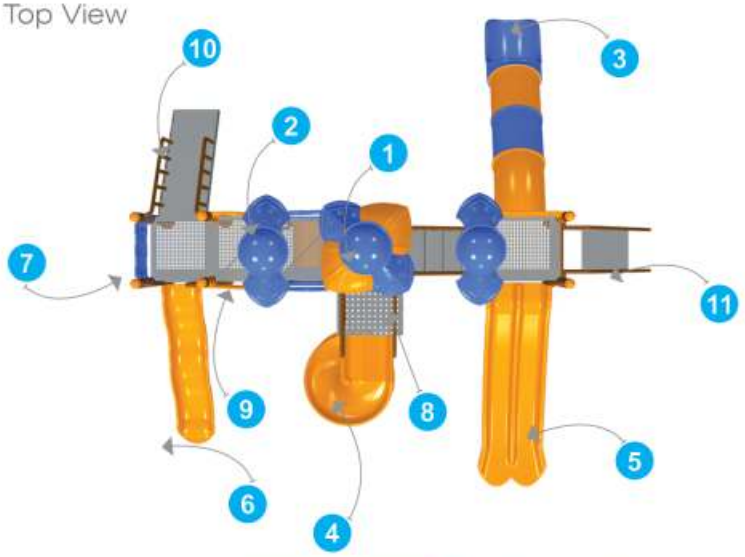

Follow Us On :

GGAS-16119
Multi Max Playzone

Actual Dimensions	: 31.8 x 26.9 x 15 ft.
Recommended Area	: 35 x 30 ft.
Age Group	: 6 - 12 Years

Front View

Product Descriptions

1. Curved Roof		2 Pcs.
2. Curved Single Roof		1 Pc.
3. Flower & Leaf		1 Pc.
4. Spiral Slider	7' Ht.	1 Pc.
5. Double Slider	5' Ht.	1 Pc.
6. Part Slider	6' Ht.	1 Pc.
7. Panel		4 Pcs.
8. Tunnel Bridge		1 Pc.
9. MS Perforated Sq. Deck		4 Pcs.
10. MS Bridge		1 Pcs.
11. MS Box Ladder		1 Pc.
12. MS Step Ladder		1 Pc.
13. MS Swing Set 2 Seater		1 Pc.
14. MS Net Climber		1 Pc.

* All plastic parts are Roto Moulded.
* The Sizes mentioned are approximate.

Back View

Top View

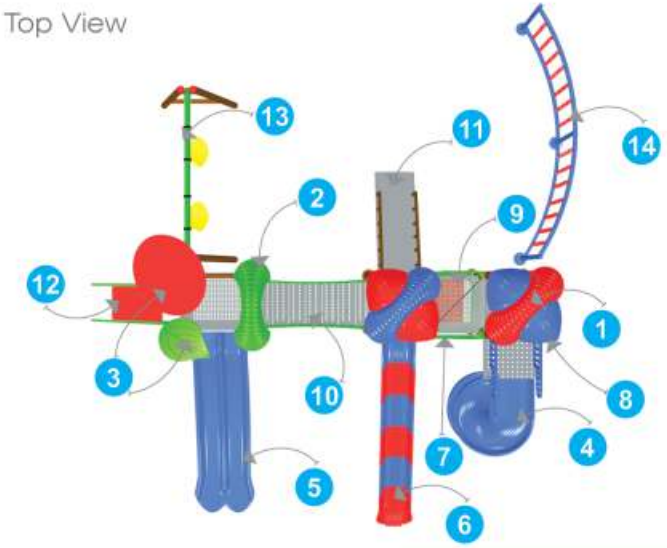

grokids™
Outdoor Play Equipments

GGAS-19201
Town House Maxi Playzone

Actual Dimensions	: 31 x 23.7 x 13 ft.
Recommended Area	: 34.5 x 27 ft.
Age Group	: 6 - 12 Years

Front View

Product Descriptions

1. UFO Roof	2 Pcs.
2. UFO Single Roof	2 Pcs.
3. Tunnel Slider	5' Ht. 1 Pc.
4. Single Slider	5' Ht. 2 Pcs.
5. Panel	6 Pcs.
6. MS Perforated Sq. Deck	5 Pcs.
7. MS Box Ladder	1 Pc.
8. MS Step Ladder	1 Pc.
9. MS Swing Set 2 Seater	1 Pc.
10. MS Net Climber	1 Pc.

* All plastic parts are Roto Moulded.
* The Sizes mentioned are approximate.

Back View

Top View

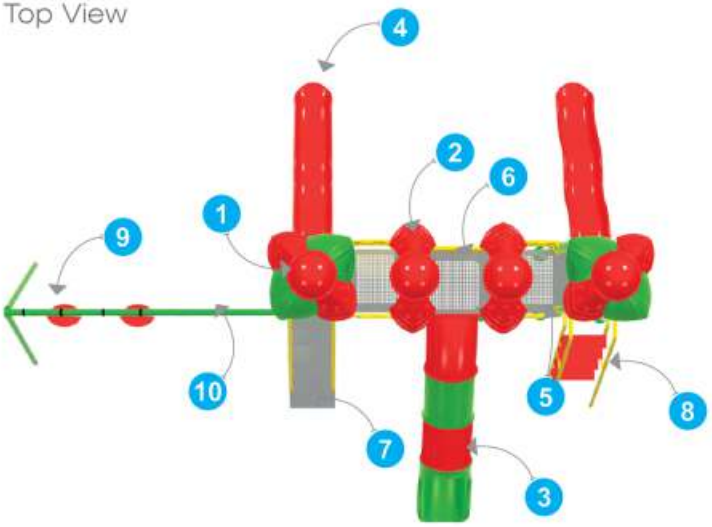

Follow Us On :

Outdoor Play Equipments

GGAS-16121
Adventure Max Playzone

Actual Dimensions	: 31.8 x 16.4 x 12 ft.
Recommended Area	: 32 x 18 ft.
Age Group	: 6 - 12 Years

Front View

Product Descriptions

1. Hut Shaped Roof	1 Pc.
2. Curved Roof	2 Pcs.
3. Leaf	2 Pcs.
4. Tunnel Slider	3' Ht. 1 Pc.
5. Spiral Slider	5' Ht. 1 Pc.
6. Single Slider	5' Ht. 1 Pc.
7. Part Slider	3' Ht. 1 Pc.
8. Panel	7 Pcs.
9. MS Perforated Sq. Deck	6 Pcs.
10. MS Bridge	1 Pcs.
11. MS Box Ladder	2 Pc.

* All plastic parts are Roto Moulded.
* The Sizes mentioned are approximate.

Back View

Top View

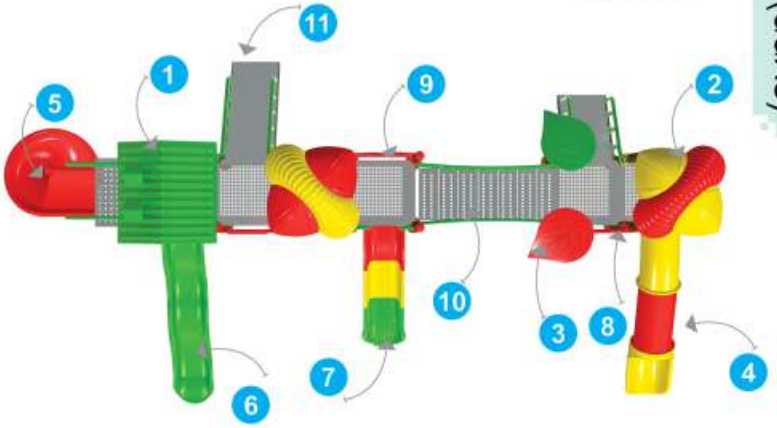

GGAS-16122 Jumbo Adventure Playzone		
	Actual Dimensions	: 36 x 24.5 x 14.7 ft.
	Recommended Area	: 38 x 27 ft.
	Age Group	: 6 - 12 Years

Front View

Product Descriptions

1. Hut Shaped Roof	1 Pc.
2. UFO Roof	2 Pcs.
3. UFO Single Roof	1 Pc.
4. Leaf	2 Pcs.
5. Tunnel Slider	6' Ht. 1 Pc.
6. Spiral Slider	5' Ht. 1 Pc.
7. Double Slider	5' Ht. 1 Pc.
8. Part Slider	5' Ht. 2 Pcs.
9. Panel	6 Pcs.
10. MS Perforated Sq. Deck	6 Pcs.
11. MS Bridge	1 Pcs.
12. MS Box Ladder	1 Pc.
13. MS Step Ladder	1 Pc.

* All plastic parts are Roto Moulded.
* The Sizes mentioned are approximate.

Back View

Top View

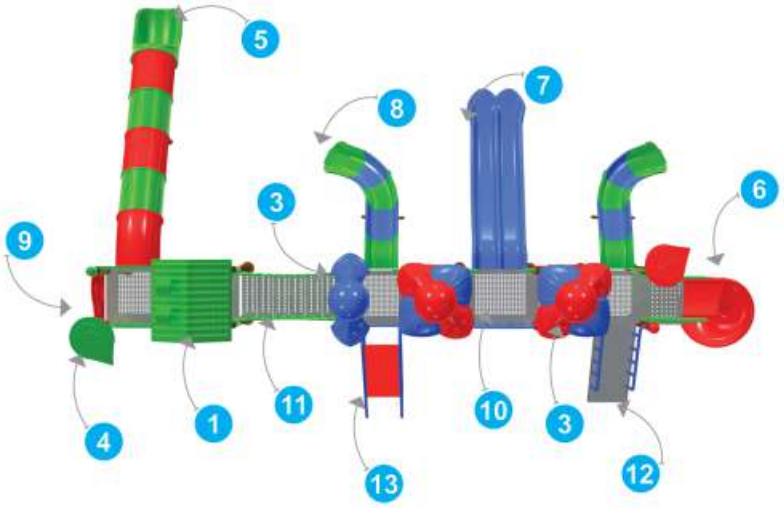

Follow Us On :

Front View

GPS-15101	**Actual Dimensions**	**: 9 x 4 x 7.5 ft.**
Villa Tube Playcentre	**Recommended Area**	**: 12.5 x 7.5 ft.**
	Age Group	**: 3 - 6 Years**

Back View

Top View

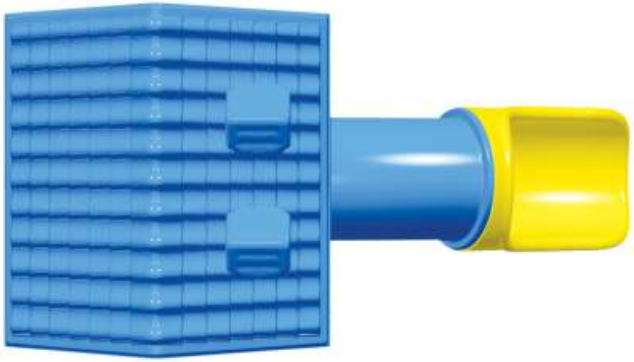

GPS-15211
Kids Castle Sr. Playcentre

Actual Dimensions	: 6.9 x 13 x 7.2 ft.
Recommended Area	: 10.5 x 16.5 ft.
Age Group	: 3 - 6 Years

Front View

Back View

Top View

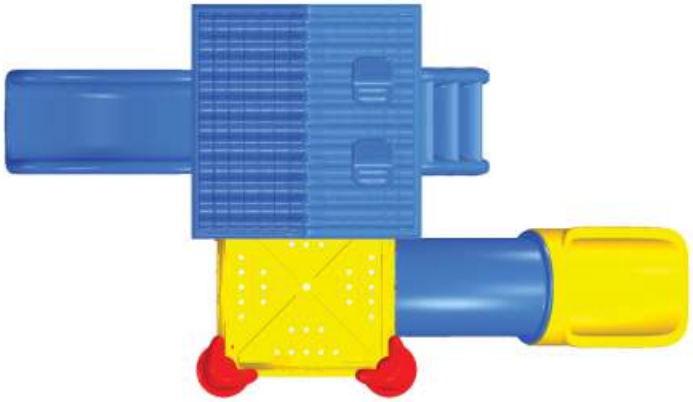

Follow Us On :

Front View

GPS-10101
Jumbo Playcentre

Actual Dimensions	: 11.5 x 7.5 x 8.2 ft.
Recommended Area	: 15 x 11 ft.
Age Group	: 3 - 6 Years

Back View

Top View

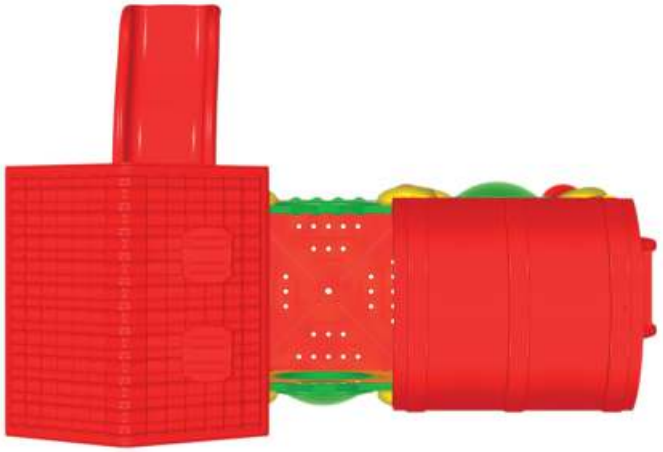

GPS-10103
Maxi Combo Playcentre

Actual Dimensions	: 16.4 x 4 x 5 ft.
Recommended Area	: 20 x 7 ft.
Age Group	: 3 - 6 Years

Front View

Back View

Top View

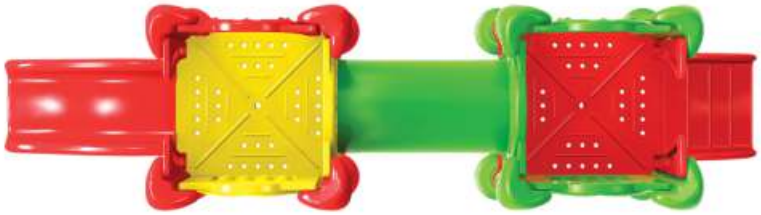

Follow Us On :

Front View

GPS-10104	**Actual Dimensions**	**: 11.5 x 8.2 x 9.2 ft.**
Slide N Glide Playcentre	**Recommended Area**	**: 15 x 11.5 ft.**
	Age Group	**: 3 - 6 Years**

Back View

Top View

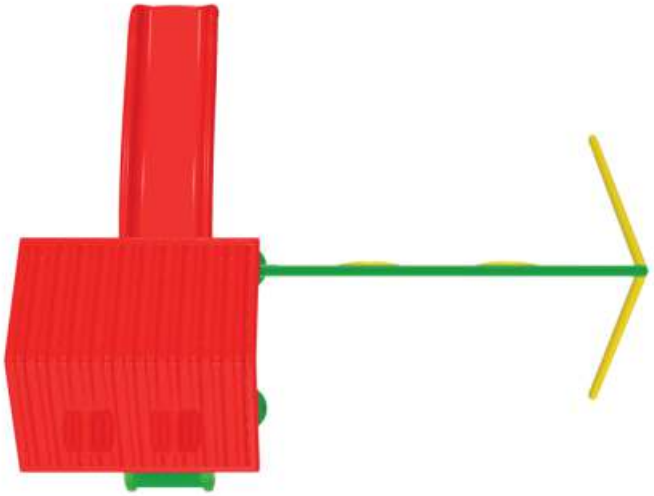

Front View

GPS-15102
Tube -N- Slide Playcentre

Actual Dimensions	: 12 x 11 x 5.6 ft.
Recommended Area	: 15.2 x 14.2 ft.
Age Group	: 3 - 6 Years

Back View

Top View

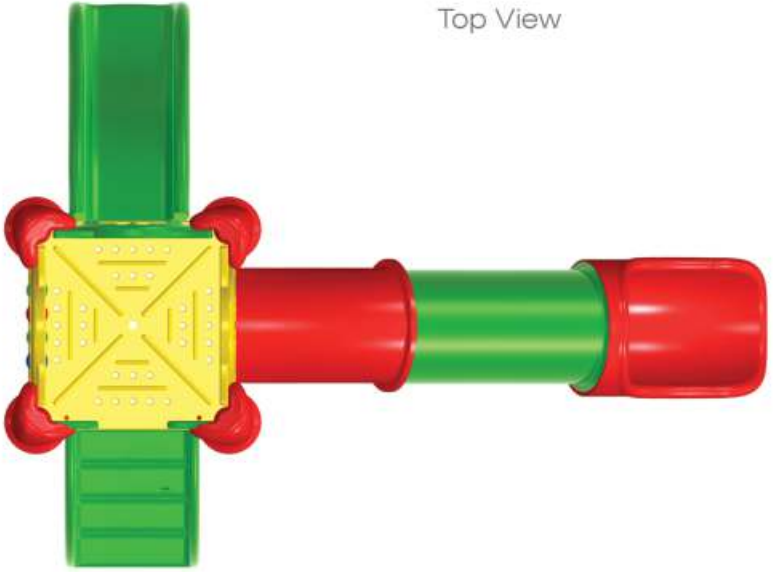

Follow Us On :

Front View

GPS-15315
Kidie Land Playcentre

Actual Dimensions	: 13.1 x 11.5 x 7.5 ft.
Recommended Area	: 16.5 x 15 ft.
Age Group	: 3 - 6 Years

Back View

Top View

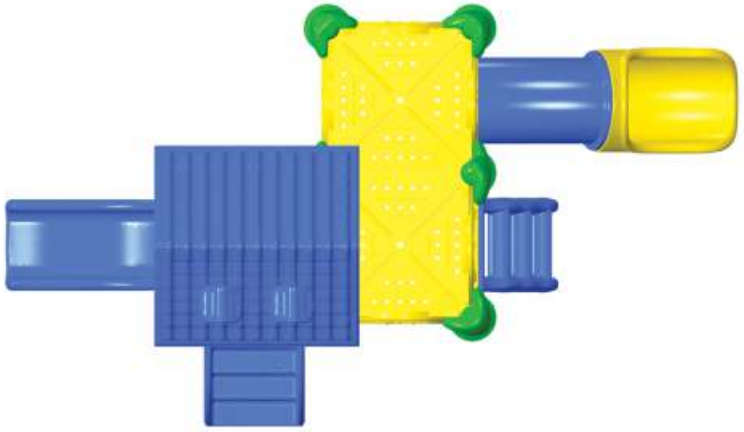

Front View

GPS-15516	Actual Dimensions	: 10.5 x 15.1 x 7.5 ft.
Play Villa Playcentre	Recommended Area	: 14 x 18.5 ft.
	Age Group	: 3 - 6 Years

Back View

Top View

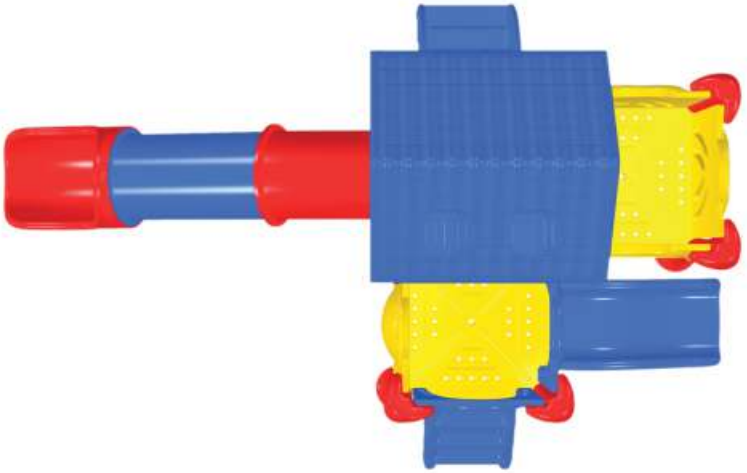

Follow Us On :

GPS-15214
Super Swing Playcentre

Actual Dimensions	: 19 x 18.3 x 12.5 ft.
Recommended Area	: 22 x 21.3 ft.
Age Group	: 3 - 6 Years

Front View

Product Descriptions

1. UFO Roof	1 Pc.
2. Spiral Slider	5' Ht. 1 Pcs.
3. Single Slider	5' Ht. 1 Pc.
4. MS Perforated Square Deck	2 Pc.
5. MS Box Ladder	5' Ht. 1 Pc.
6. MS Swing Set 2 Seater	1 Pc.

* All plastic parts are Roto Moulded.
* The Sizes mentioned are approximate.

Back View

Top View

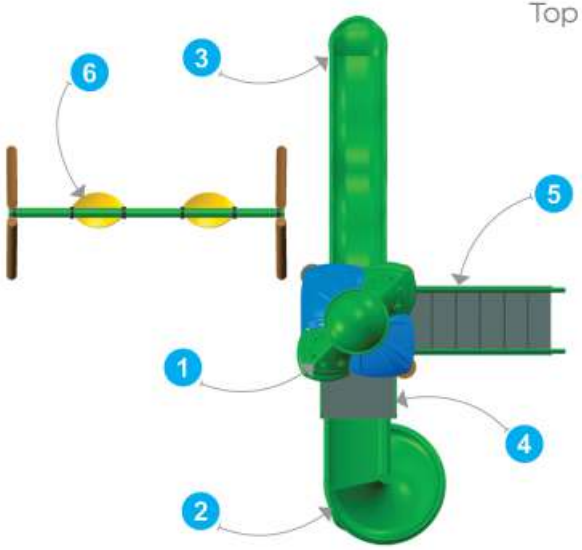

Front View

GPS-15703	Actual Dimensions	: 23 x 16.4 x 11.5 ft.
Swing Land Playcentre	Recommended Area	: 26.5 x 20 ft.
	Age Group	: 3 - 6 Years

Back View

Top View

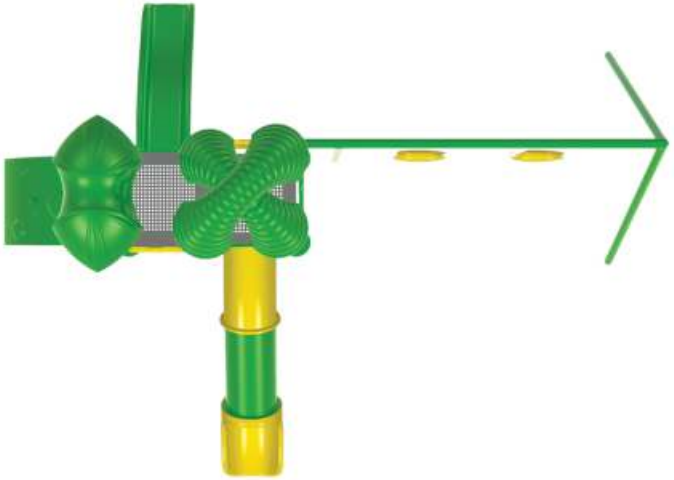

Follow Us On :

Front View

GPS-15604
Jumbo Kidie Land Playcentre

Actual Dimensions	: 18.4 x 13 x 8.5 ft.
Recommended Area	: 22 x 16.5 ft.
Age Group	: 3 - 6 Years

Back View

Top View

GPS-15609
Jumbo Kids Castle Playcentre

Actual Dimensions	: 19 x 16.5 x 9.3 ft.
Recommended Area	: 22.5 x 20 ft.
Age Group	: 3 - 6 Years

Front View

Back View

Top View

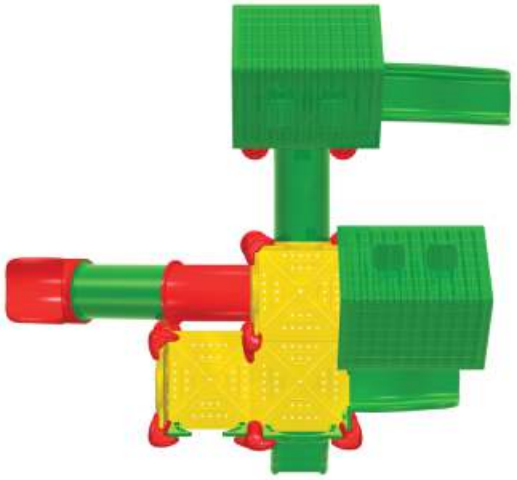

Follow Us On :

Front View

GPS-15706
Kids Palace Playcentre

Actual Dimensions	: 17.2 x 12.3 x 9.8 ft.
Recommended Area	: 20 x 15.5 ft.
Age Group	: 3 - 6 Years

Back View

Top View

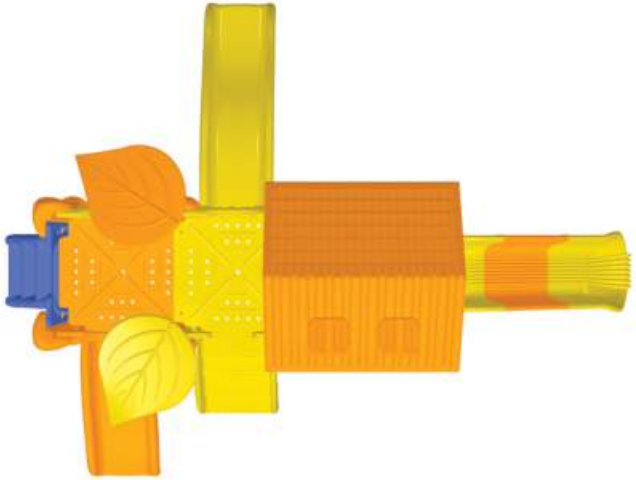

Front View

GPS-18107 ***Loco Engin Jumbo Playzone***	**Actual Dimensions**	**: 23 x 11.5 x 11.5 ft.**
	Recommended Area	**: 26.5 x 15 ft.**
	Age Group	**: 3 - 6 Years**

Back View

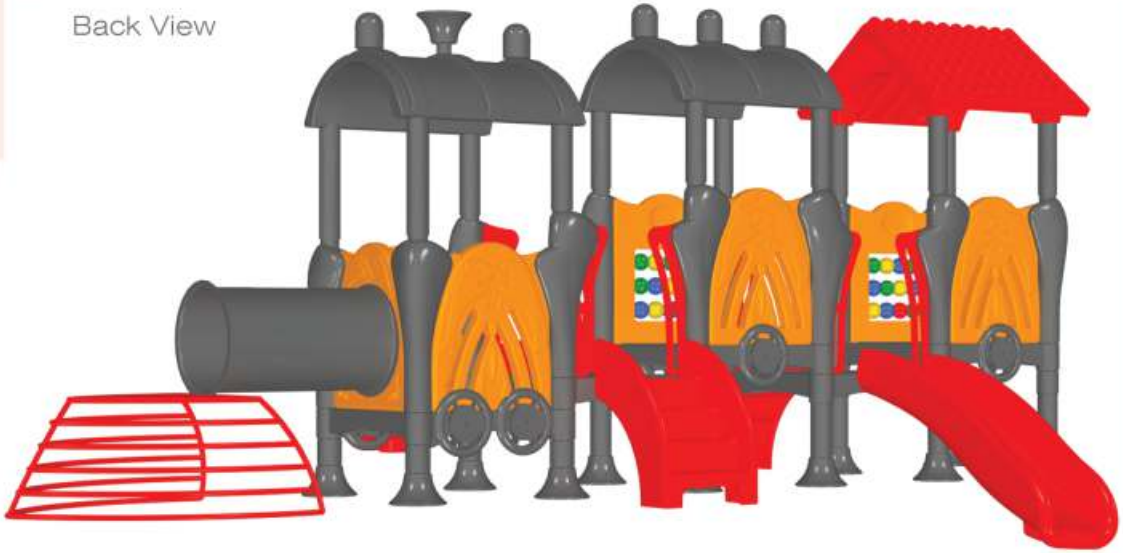

Top View

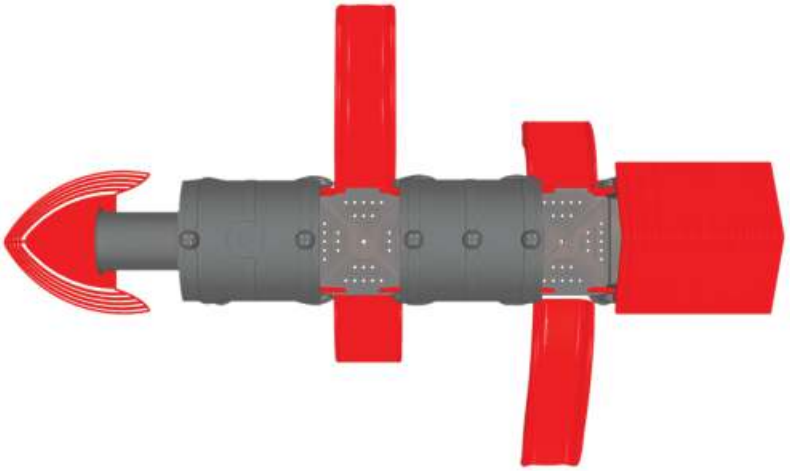

Follow Us On :

GPS-15708
Jr. Tree House Playcentre

Actual Dimensions	: 12.3 x 20.5 x 11.5 ft.
Recommended Area	: 15 x 24 ft.
Age Group	: 3 - 6 Years

Front View

Back View

Top View

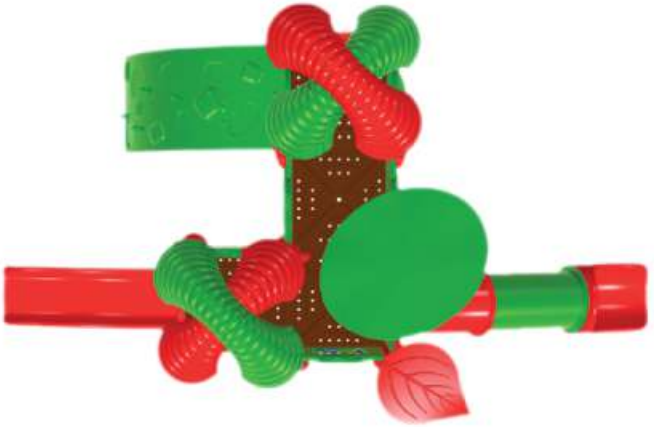

GPS-15710
Tri House Maxi Playcentre

Actual Dimensions	: 32.8 x 12.3 x 13 ft.
Recommended Area	: 36 x 16 ft.
Age Group	: 3 - 6 Years

Front View

Product Descriptions

1. UFO Roof	3 Pc.
2. Tunnel Slide	5' Ht. 1 Pcs.
3. Jr. Single Slider	3' Ht. 2 Pc.
4. Panel	3 Pc.
5. Plastic Climber	2 Pc.
6. MS Perforated Square Deck	3 Pc.
7. MS Bridge	2 Pc.

* All plastic parts are Roto Moulded.
* The Sizes mentioned are approximate.

Back View

Top View

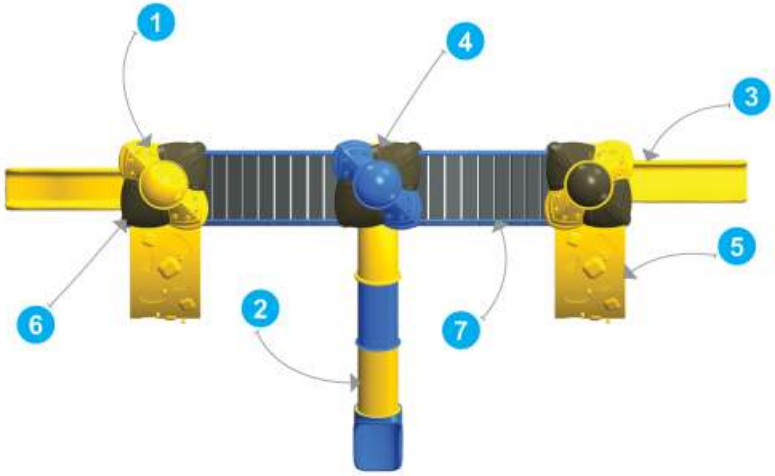

Follow Us On :

GPS-15712
Kids Tree Playcentre

Actual Dimensions	: 21.3 x 14.8 x 13 ft.
Recommended Area	: 24 x 18 ft.
Age Group	: 3 - 6 Years

Front View

Product Descriptions

1. Hut Shaped Roof	1 Pc.
2. Curved Shaped Roof	1 Pc.
3. Leaf	2 Pcs.
4. Tunnel Slide	3' Ht. 1 Pc.
5. Single Slider	5' Ht. 1 Pc.
6. Part Slider	3' Ht. 1 Pc.
7. Panel	5 Pcs.
8. Plastic Climber	1 Pc.
9. MS Perforated Square Deck	4 Pc.
10. MS Box Ladder	1 Pc.

* All plastic parts are Roto Moulded.
* The Sizes mentioned are approximate.

Back View

Top View

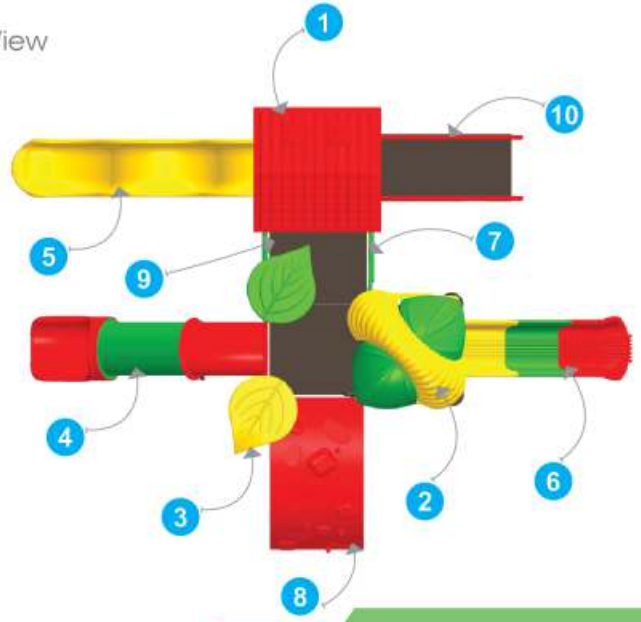

GPS-15714
Jr. Garden House Playcentre

Actual Dimensions	: 24.6 x 18 x 11.5 ft.
Recommended Area	: 27.5 x 21 ft.
Age Group	: 3 - 6 Years

Front View

Product Descriptions

1. UFO Roof	2 Pcs.
2. Tunnel Slider	3' Ht. 1 Pc.
3. Part Slider	3' Ht. 2 Pcs.
4. Panel	4 Pcs.
5. Ring Tunnel	1 Pc.
6. Plastic Climber	1 Pc.
7. MS Perforated Square Deck	4 Pcs.
8. MS Box Ladder	1 Pc.

* All plastic parts are Roto Moulded.
* The Sizes mentioned are approximate.

Back View

Top View

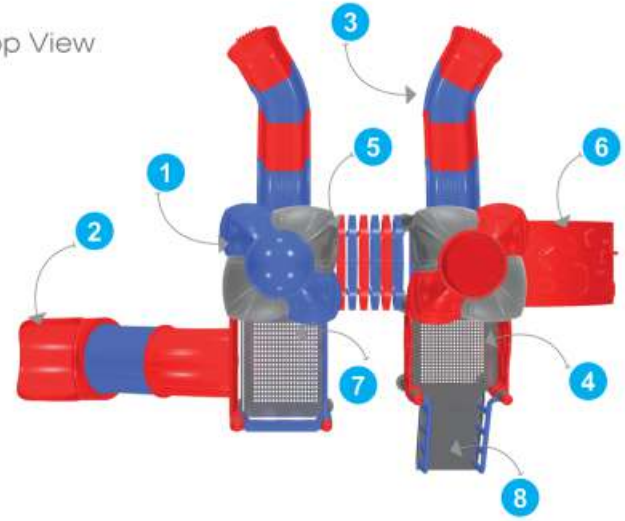

Follow Us On :

GPS-15715
Kids Zone Playcentre

Actual Dimensions	: 21.3 x 14 x 13 ft.
Recommended Area	: 24 x 17 ft.
Age Group	: 3 - 6 Years

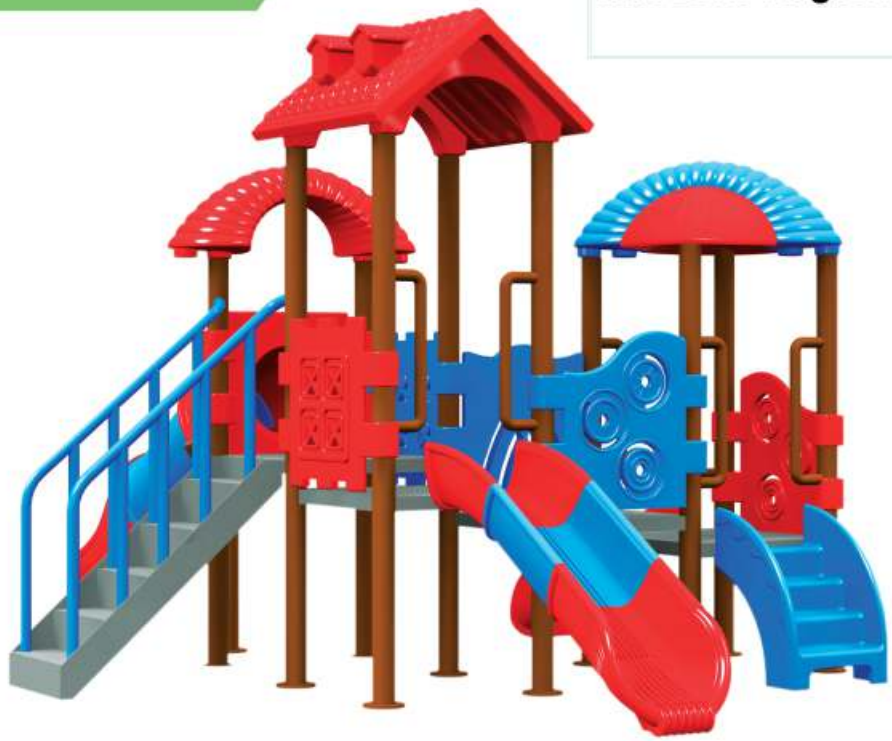

Front View

Product Descriptions

1. Hut Shaped Roof	1 Pc.
2. Curved Roof	1 Pc.
3. Single Curved Roof	1 Pc.
4. Tunnel Slider	1 Pc.
5. Part Slider	1 Pc.
6. Jr. Single Slider	1 Pc.
7. Plastic Big Stair	1 Pc.
8. Square Deck	4 Pcs.
9. MS Box Ladder	1 Pc.
10. Panel	5 Pcs.

* All plastic parts are Roto Moulded.
* The Sizes mentioned are approximate.

Back View

Top View

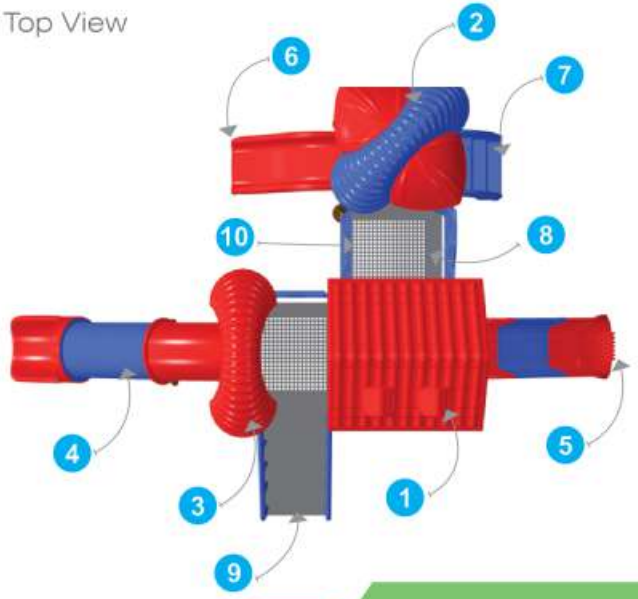

GPS-15718
Space Ship Playcentre

Actual Dimensions	: 31 x 21.4 x 11.5 ft.
Recommended Area	: 34.5 x 25 ft.
Age Group	: 3 - 6 Years

Front View

Product Descriptions

1. UFO Roof	2 Pcs.
2. Single UFO Roof	2 Pcs.
3. Tunnel Slider	1 Pc.
4. Jr. Single Slider	2 Pcs.
5. Panel	5 Pcs.
6. Tunnel Bridge	1 Pc.
7. Plastic Stair	2 Pcs.
8. MS Perforated Square Deck	4 Pcs.
9. MS Net Climber	1 Pc.

* All plastic parts are Roto Moulded.
* The Sizes mentioned are approximate.

Back View

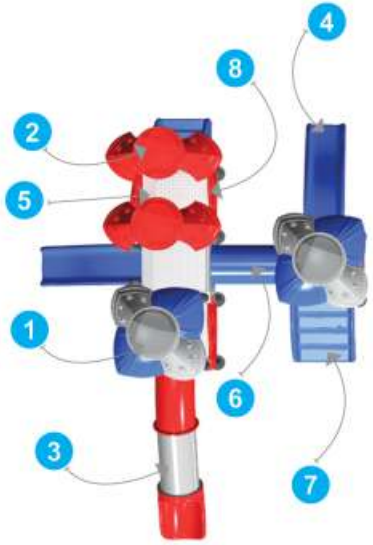

Top View

Follow Us On :

GPS-15720
Pirate Ship Playcentre

Actual Dimensions	: 27.8 x 24.6 x 13 ft.
Recommended Area	: 31 x 27.6 ft.
Age Group	: 3 - 6 Years

Front View

Product Descriptions

1. Hut Shaped Roof	2 Pcs.
2. Tunnel Slider	5' Ht. 1 Pc.
3. Single Slider	5' Ht. 1 Pc.
4. Jr. Single Slider	2 Pcs.
5. Panel	4 Pcs.
6. Plastic Flag	2 Pcs.
7. MS Perforated Sq. Deck	5 Pcs.
8. MS Bridge	1 Pcs.
9. MS Box Ladder	1 Pc.

* All plastic parts are Roto Moulded.
* The Sizes mentioned are approximate.

Back View

Top View

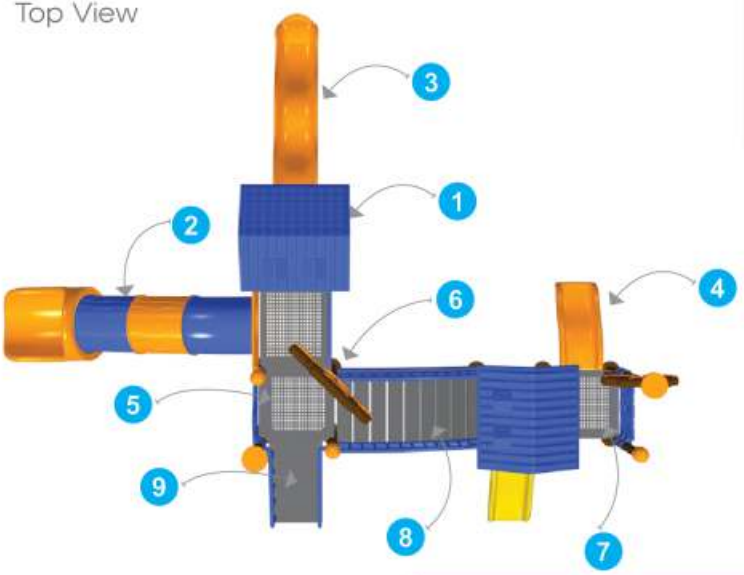

GPS-15722
Kids UFO Playcentre

Actual Dimensions	: 26 x 24.6 x 13 ft.
Recommended Area	: 29 x 27 ft.
Age Group	: 3 - 6 Years

Front View

Product Descriptions

1. UFO Roof	2 Pcs.
2. Flower	2 Pcs.
3. Tunnel Slider	5' Ht. 1 Pc.
4. Single Slider	5' Ht. 1 Pc.
5. Part Slider	1 Pc.
6. Panel	5 Pcs.
7. Ring Tunnel	1 Pc.
8. Plastic Climber	1 Pcs
9. MS Perforated Sq. Deck	5 Pcs.
10. MS Box Ladder	1 Pc.

* All plastic parts are Roto Moulded.
* The Sizes mentioned are approximate.

Back View

Top View

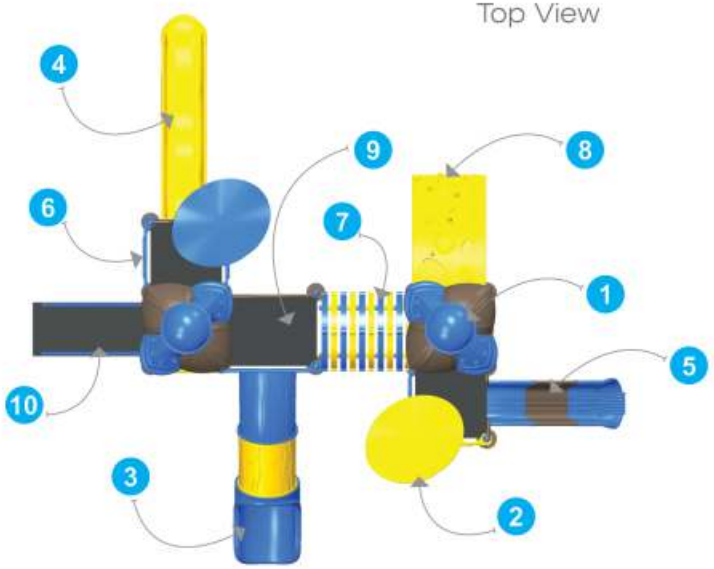

Follow Us On :

GPS-15724
Jr. Play House Playcentre

Actual Dimensions	: 27.8 x 21.3 x 11.5 ft.
Recommended Area	: 31 x 24 ft.
Age Group	: 3 - 6 Years

Front View

Product Descriptions

1. Curved Roof	2 Pcs.
2. Single Curved Roof	1 Pc.
3. Flower & Leaf	1 Pcs.
4. Tunnel Slider	2 Pcs.
5. Jr. Single Slider	1 Pc.
6. Part Slider	1 Pc.
7. Plastic Stair	1 Pc.
8. Plastic Climber	1 Pc.
9. Ring Tunnel	1 Pc.
10. Panel	5 Pcs.
11. MS Perforated Sq. Deck	5 Pcs.

* All plastic parts are Roto Moulded.
* The Sizes mentioned are approximate.

Back View

Top View

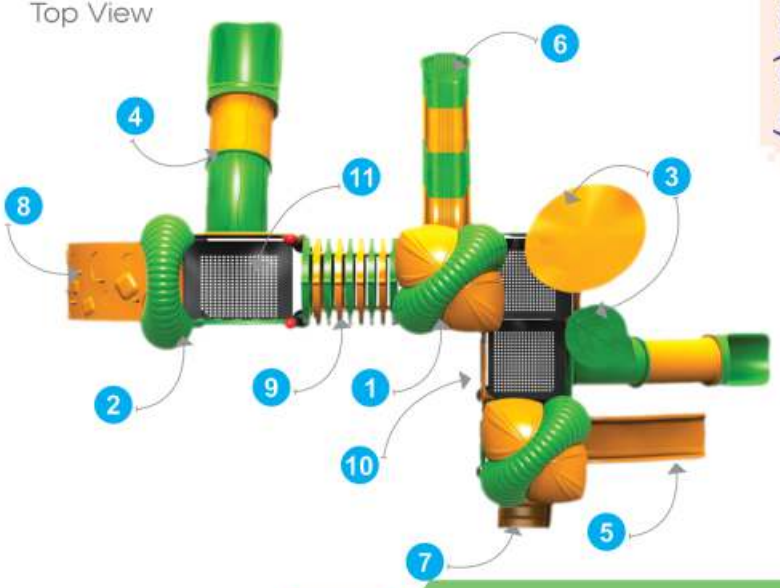

SCRAMBLER SERIES

GKC-9310
Web Scrambler Ultra

Actual Dimensions	: 27.2 x 20.3 x 9.8 ft.
Recommended Area	: 30.5 x 23.5 ft.
Age Group	: 10 Years & Above

Follow Us On :

GKC-9320
Jr. Modern Scrambler

Actual Dimensions	: 21.6 x 17.4 x 9.8 ft.
Recommended Area	: 25 x 21 ft.
Age Group	: 10 Years & Above

GIS-12032 ***3 IN 1 Combo Set***	Actual Dimensions : 12 x 8.3 x 8.5 ft. Recommended Area : 14 x 9.5 ft. Age Group : 4 - 14 Years

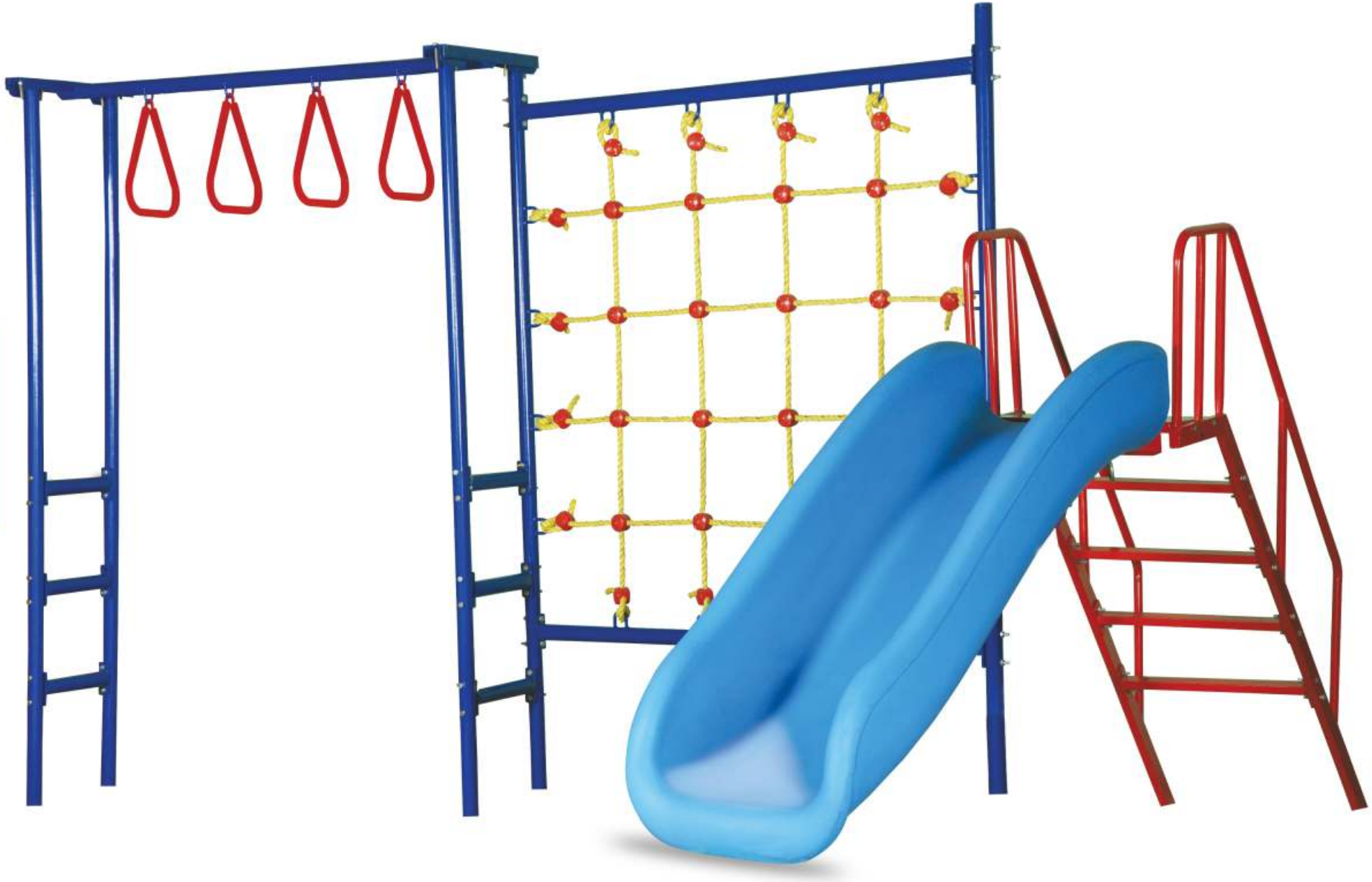

Follow Us On :

GIS-10105
Double Wavy Slide

Actual Dimensions	: 12 x 3.7 x 7 ft.
Recommended Area	: 14 x 4.7 ft.
Platform Height	: 1.5 mtr. (4.9 ft.)
Age Group	: 4 - 14 Years

GIS-10106
Wavy Slide

Actual Dimensions	: 12 x 2.3 x 7 ft.
Recommended Area	: 14 x 3 ft.
Platform Height	: 1.5 mtr. (4.9 ft.)
Age Group	: 4 - 14 Years

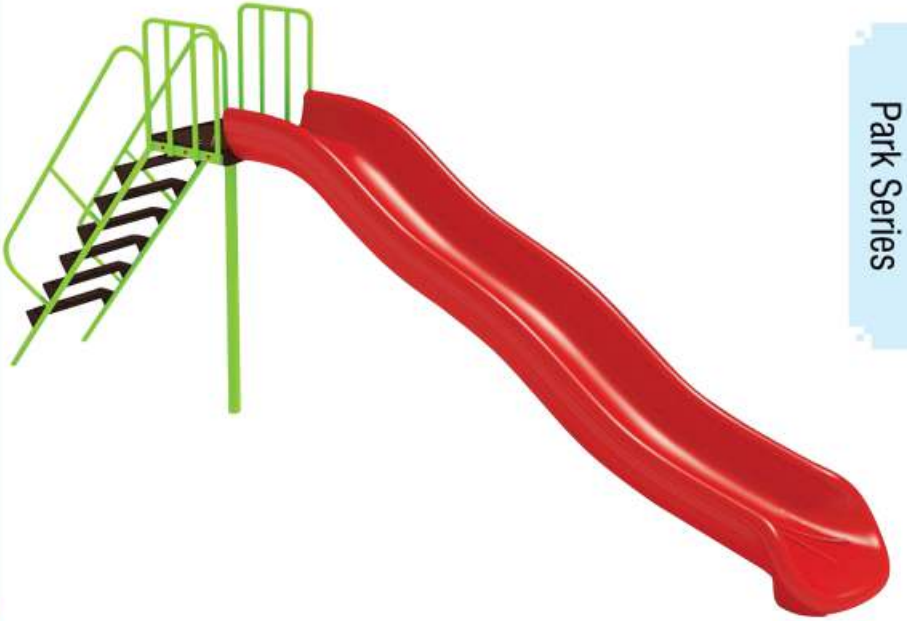

GIS-10278
Ultra Slide Fun

Actual Dimensions	: 9.3 x 1.8 x 4.6 ft.
Recommended Area	: 11 x 4 ft.
Platform Height	: 3.4 ft.
Age Group	: 4 - 10 Years

GIS-10108
Jumbo Wavy Slide

Actual Dimensions	: 14 x 5 x 8 ft.
Recommended Area	: 16 x 7 ft.
Platform Height	: 2.1 mtr. (6.9 ft.)
Age Group	: 4 - 14 Years

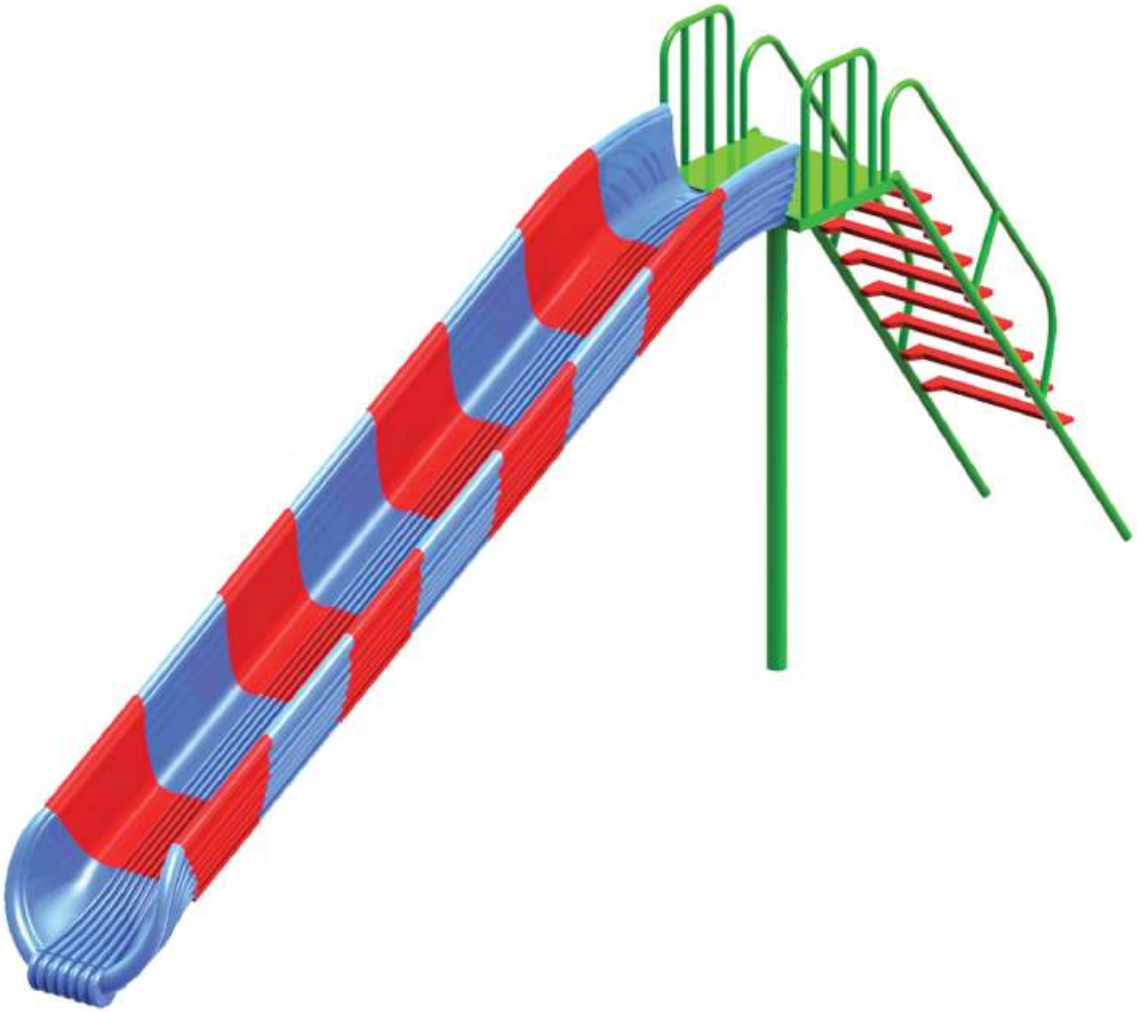

GIS-10115
Triple Slide Fun

Actual Dimensions	: 18 x 19 x 9 ft.
Recommended Area	: 22 x 21 ft.
Platform Height	: 5 ft.
Age Group	: 4 - 14 Years

GIS-10107
Spiral Slide

Actual Dimensions	: 11.8 x 4.2 x 6.9 ft.
Recommended Area	: 15 x 7.2 ft.
Platform Height	: 5 ft.
Age Group	: 4 - 14 Years

GIS-10109
Jumbo Spiral Slide

Actual Dimensions	: 16 x 5 x 10.5 ft.
Recommended Area	: 19 x 8 ft.
Platform Height	: 7 ft.
Age Group	: 4 - 14 Years

Follow Us On :

GIS-10112
Slide 3 Pcs. Tunnel

Actual Dimensions	: 12 x 3.7 x 7 ft.
Recommended Area	: 14 x 4.7 ft.
Platform Height	: 1 mtr. (3 ft.)
Age Group	: 4 - 14 Years

GIS-10113
Slide 4 Pcs. Tunnel

Actual Dimensions	: 15 x 3.7 x 9.5 ft.
Recommended Area	: 17 x 4.7 ft.
Platform Height	: 1.5 mtr. (4.9 ft.)
Age Group	: 4 - 14 Years

GIS-12022
Single Seater Swing

Actual Dimensions	: 6 x 5 x 8.5 ft.
Recommended Area	: 8 x 9 ft.
Age Group	: 4 - 14 Years

GIS-12023
2 Seater A Swing

Actual Dimensions	: 10 x 5 x 8.5 ft.
Recommended Area	: 12 x 9 ft.
Age Group	: 4 - 14 Years

GIS-12027
2 Seater U Swing

Actual Dimensions	: 10 x 3.5 x 8.5 ft.
Recommended Area	: 12 x 7.5 ft.
Age Group	: 4 - 14 Years

GIS-12029
4 Seater U Swing

Actual Dimensions	: 20 x 3.5 x 8.5 ft.
Recommended Area	: 22 x 7.5 ft.
Age Group	: 4 - 14 Years

NEW PRODUCT

GIS-12060
Disc Swing

Actual Dimensions	: 6.6 x 4.7 x 6.5 ft.
Recommended Area	: 8.6 x 6.7 ft.
Age Group	: 4 - 14 Years

GIS-12038
Stepper

Actual Dimensions	: 10 x 2.7 x 8.5 ft.
Recommended Area	: 12 x 4.7 ft.
Age Group	: 4 - 14 Years

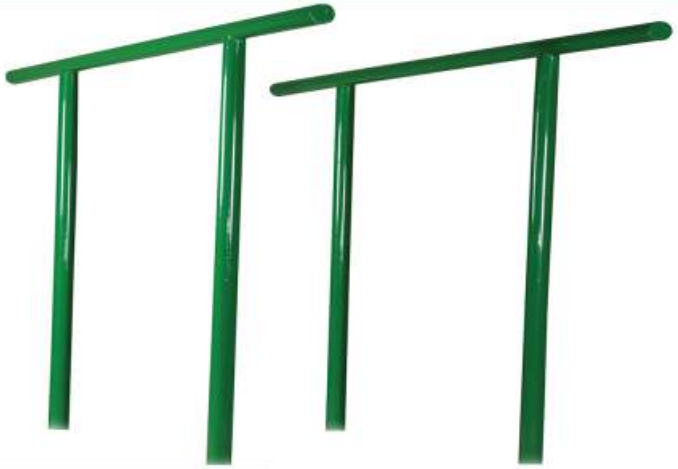

GIS-12020
Paraller Bar

Actual Dimensions	: 6.7 x 2 x 3 ft.
Recommended Area	: 7.7 x 4 ft.
Age Group	: 4 - 14 Years

GIS-12021
Loop Rung

Actual Dimensions	: 10 x 2.7 x 8.5 ft.
Recommended Area	: 12 x 4.7 ft.
Age Group	: 4 - 14 Years

Follow Us On :

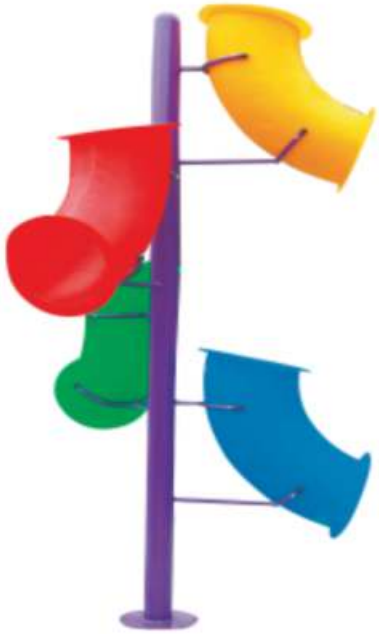

GIS-12048
Fun Tunnel

Actual Dimensions : 8 ft.
Age Group : 4 - 14 Years

GIS-12049
Basket Ring

Actual Dimensions : 6 ft.
Age Group : 4 - 14 Years

GIS-12026
Net Climber

Actual Dimensions : 7 x 7.5 ft.
Recommended Area : 8 x 2 ft.
Age Group : 4 - 14 Years

GIS-12030N
Merry Go Round

Actual Dimensions	: D 4 x H 3.2 ft.
Recommended Area	: 6 x 6 ft.
Age Group	: 4 - 14 Years

NEW PRODUCT

GIS-12031N
Merry Go Round

Actual Dimensions	: D 5.5 x H 3.2 ft.
Recommended Area	: 8 x 6 ft.
Age Group	: 4 - 14 Years

NEW PRODUCT

GIS-12055
Combo See Saw

Actual Dimensions	: 8 x 4 x 2.2 ft.
Recommended Area	: 10 x 6 ft.
Age Group	: 4 - 14 Years

Us On :

GIS-12050
Spring See Saw 2 Seater

Actual Dimensions	: 8 x 1.7 x 2.2 ft.
Recommended Area	: 10 x 3.7 ft.
Age Group	: 4 - 14 Years

GIS-12051
Spring See Saw 4 Seater

Actual Dimensions	: 10 x 1.7 x 2.2 ft.
Recommended Area	: 12 x 3.7 ft.
Age Group	: 4 - 14 Years

GIS-12034
2 Seater See Saw

Actual Dimensions	: 8 x 1.7 x 2.2 ft.
Recommended Area	: 10 x 3.7 ft.
Age Group	: 4 - 14 Years

GIS-12035
4 Seater See Saw

Actual Dimensions	: 10 x 1.7 x 2.2 ft.
Recommended Area	: 12 x 3.7 ft.
Age Group	: 4 - 14 Years

GIS-12036 Monkey Bar

Actual Dimensions	: 10 x 2.7 x 8.5 ft.
Recommended Area	: 12 x 4.7 ft.
Age Group	: 4 - 14 Years

GIS-12037 Walking Barrel

Actual Dimensions	: 8 x 7 ft.
Recommended Area	: 10 x 10 ft.
Age Group	: 4 - 14 Years

Follow Us On :

Option-01

GIS-12046
Maze Chase

Actual Dimensions	: 13 x 9.8 x 3.6 ft.
Recommended Area	: 13.5 x 10.5 ft.
Age Group	: 4 - 14 Years

Option-02

Option-03

GIS-12043
Wall Climber (1 Pc.)

Actual Dimensions : H 2.6 x W 2.6 ft.
Age Group : 4 - 14 Years

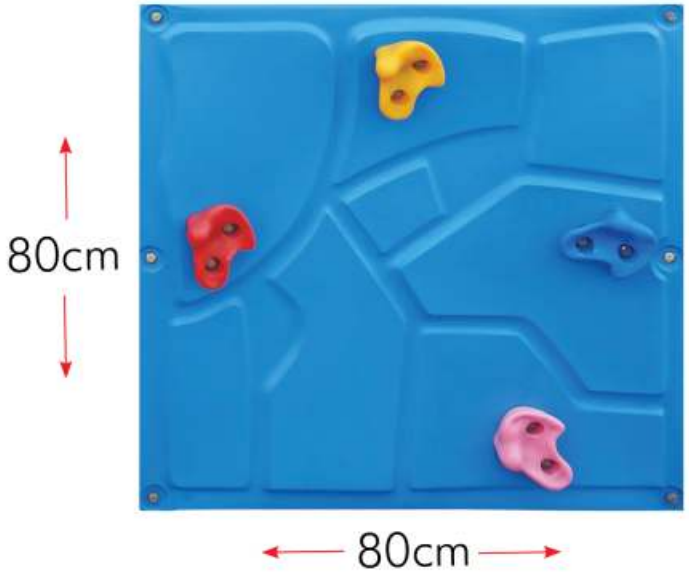

Can be used in various designs

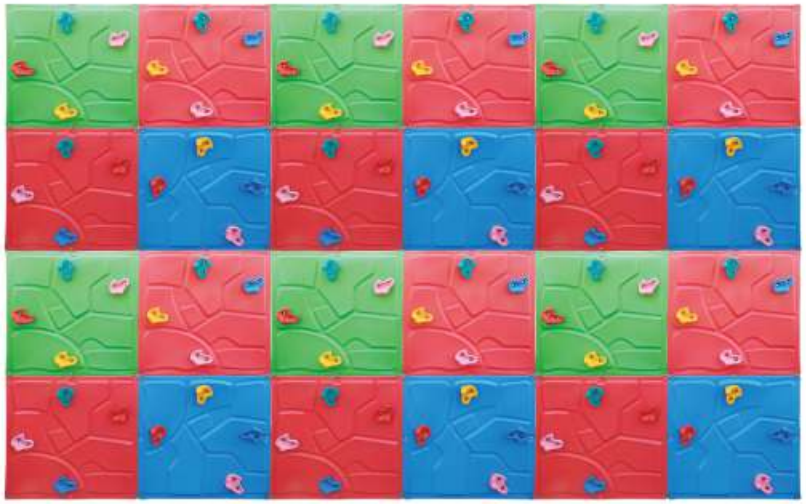

GIS-12033
Hopper (Set of 7 Pcs.)

Actual Dimensions : D 1 x H 1 ft.
Age Group : 4 - 14 Years

Can be used in various Combinations

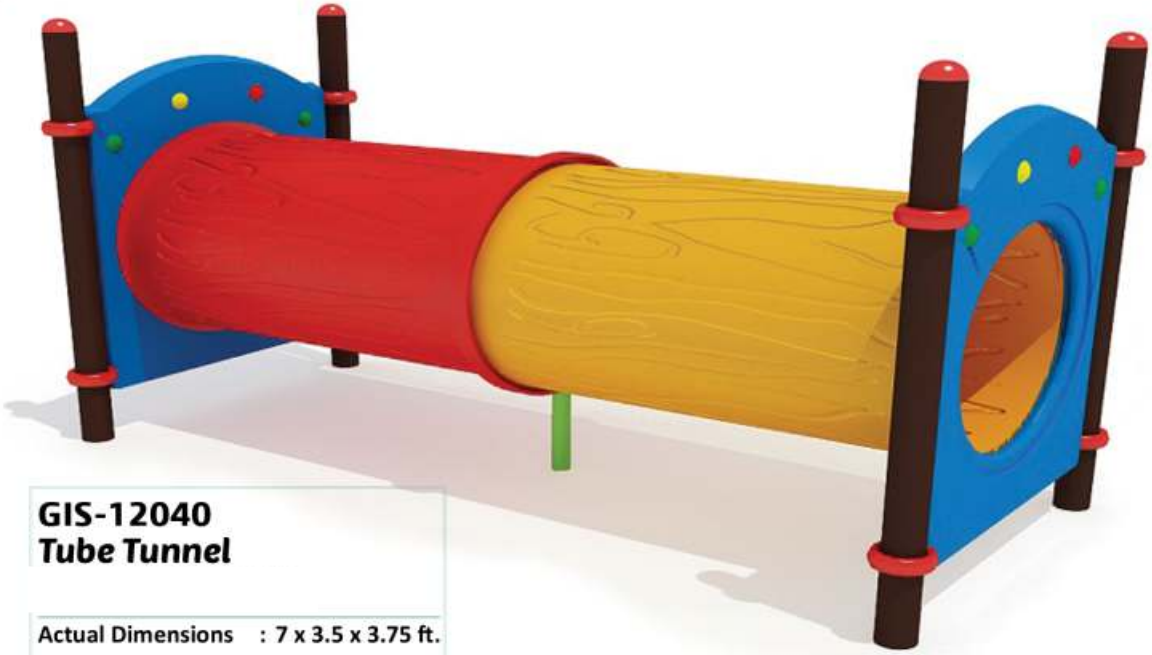

GIS-12040
Tube Tunnel

Actual Dimensions : 7 x 3.5 x 3.75 ft.
Recommended Area : 10 x 5.5 ft.
Age Group : 4 - 14 Years

Follow Us On :

GIS-12045
Rock Climber (1 Pc.)
Price : ₹ 24,800/-

Actual Dimensions : H 6 x W 3 ft.
Age Group : 4 - 14 Years

Can be used in various Combinations

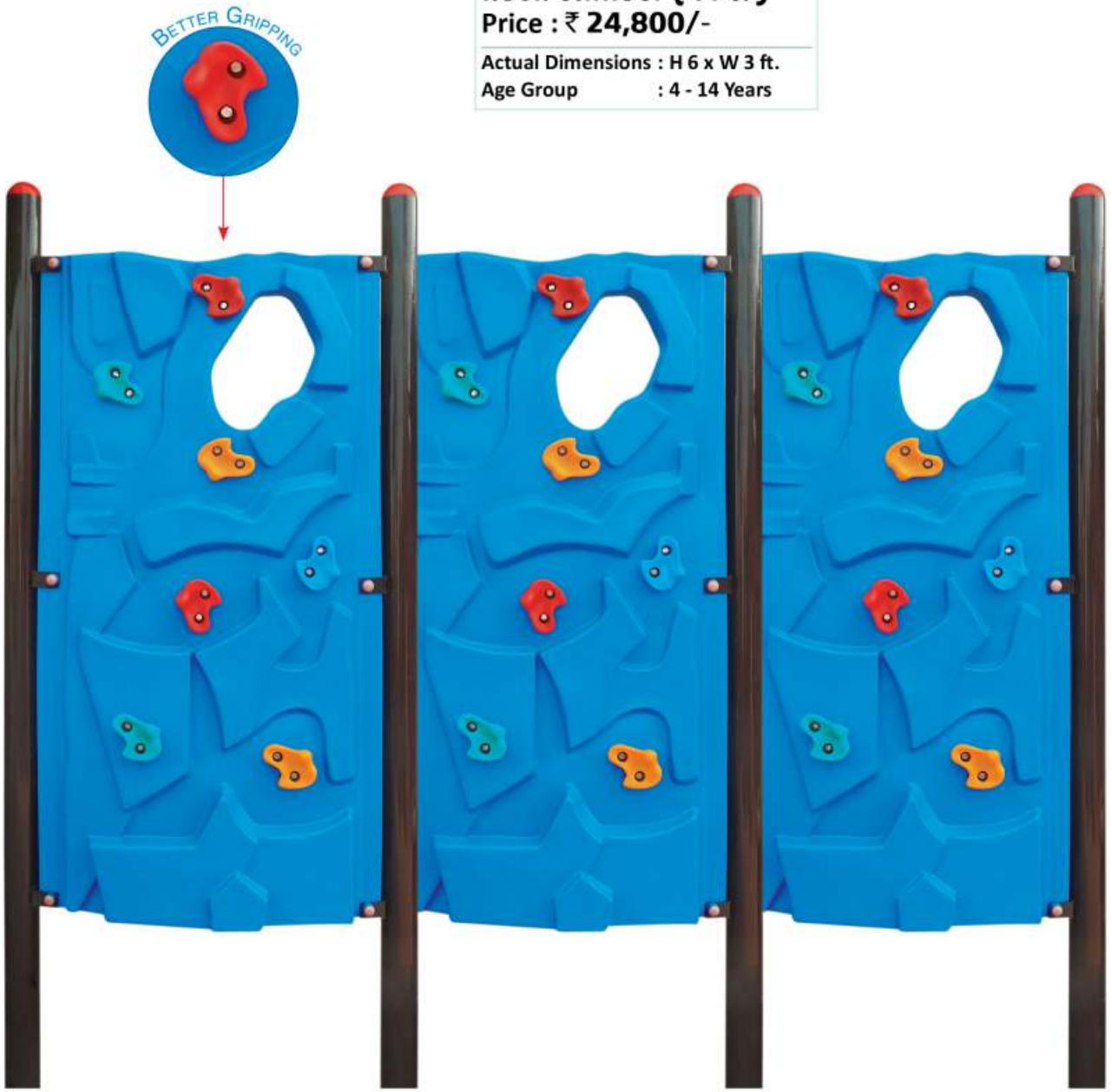

Max. 30 Kgs
WT. LIMIT

GKR-11418
Elephant Spring Twin Rider

Actual Dimensions	: 3.6 x 1 x 6.7 ft.
Recommended Area	: 7 x 4.5 ft.
Age Group	: 4 - 12 Years

Max. 30 Kgs
WT. LIMIT

GKR-11404
Puppy Spring Rider

Actual Dimensions	: 2.8 x 1 x 2.6 ft.
Recommended Area	: 6 x 4.5 ft.
Age Group	: 4 - 12 Years

Max. 30 Kgs
WT. LIMIT

GKR-11409
Horse Spring Rider

Actual Dimensions	: 2.5 x 1 x 2.6 ft.
Recommended Area	: 6 x 4.5 ft.
Age Group	: 4 - 12 Years

Max. 30 Kgs
WT. LIMIT

GKR-11410
Bug Bee Spring Rider

Actual Dimensions	: 2.5 x 1 x 2.7 ft.
Recommended Area	: 6 x 4.5 ft.
Age Group	: 4 - 12 Years

Follow Us On :

Max. 40 Kgs
WT. LIMIT

GKR-11419
Dino Spring Twin Rider

Actual Dimensions	: 5.3 x 1.3 x 3 ft.
Recommended Area	: 7 x 4 ft.
Age Group	: 4 - 12 Years

Max. 40 Kgs
WT. LIMIT

GKR-11412
Flower Spring Rider

Actual Dimensions	: 1.7 x 1.5 x 2.3 ft.
Recommended Area	: 4 x 4 ft.
Age Group	: 4 - 12 Years

Max. 40 Kgs
WT. LIMIT

GKR-11413
Jumbo Spring Rider

Actual Dimensions	: 2.3 x 1.5 x 2.2 ft.
Recommended Area	: 5 x 4 ft.
Age Group	: 4 - 12 Years

Max. 40 Kgs
WT. LIMIT

GKR-11414
Car Spring Rider

Actual Dimensions	: 2.7 x 1.4 x 2.9 ft.
Recommended Area	: 5 x 4 ft.
Age Group	: 4 - 12 Years

GOF-17141
Double Twister Standing

Actual Dimensions : 4.9 x 4.3 x 3.6 ft.
Recommended Area : 7 x 7 ft.
Age Group : 12 Years & Above

GOF-17143
Cycle

Actual Dimensions : 3.3 x 1.5 x 4.6 ft.
Recommended Area : 6 x 3 ft.
Age Group : 12 Years & Above

GOF-17146
Pull Chair

Actual Dimensions : 6.2 x 2.4 x 6.3 ft.
Recommended Area : 8.2 x 5 ft.
Age Group : 12 Years & Above

GOF-17147
Arm & Shoulder Wheel

Actual Dimensions : 5.2 x 2.8 x 4.6 ft.
Recommended Area : 7 x 5 ft.
Age Group : 12 Years & Above

Follow Us On :

GIP-14104
Jungle Fun

Actual Dimensions	: 12.3 x 8.2 x 9.1 ft.
Recommended Area	: 15.3 x 11.2 ft.
Age Group	: 3 - 10 Years

Front View

Back View

Top View

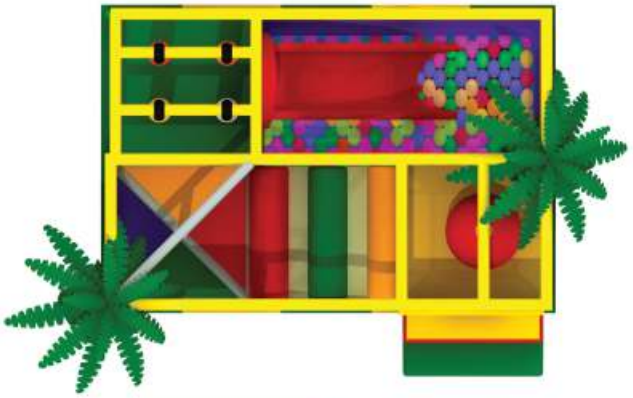

Follow Us On :

OUR INSTALLATIONS

Follow Us On :

OUR INSTALLATIONS

GO GREEN
Think green, Be green

TELANGANA CORPORATE SERVICES

Office address: MN Reddy Nagar, Suchitra - Kompally, Hyderabad - Telangana State

www.telanganacorporateservices.in

Contact: 9666612277

GO GREEN
Think green, Be green